The Timken Company
4500 Mt Pleasant St. NW
N. Canton, OH 44720
Phone: (234) 262-3000
E-Mail: CustomerCAD@timken.com • **Web site:** www.timken.com

Timken Part Number SAS 1, Pillow Block Units Setscrew Locking (Includes Industrial and Standard Series)



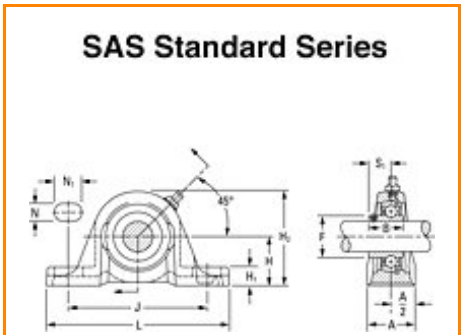

Specifications | Dimensions | Basic Load Ratings

Specifications

Bore Size d	1 in 25.4 mm
Bearing Number	GYA100RRB
Inside Ring Outside Diameter	1.316 in 33.4 mm
Dimension B1	1.110 in 28.2 mm
Dimension T	0.705 in 17.9 mm
Dimension D1	1.327 in 33.7 mm
Series	Standard
Weight	1.653 lb 0.75 Kg

Seal Type	Narrow Shroud

Dimensions

Shaft Height H	36.51 mm 1.437 in
Total Length L	139.70 mm 5.500 in
Total Width A	1.406 in 35.7 mm
Bolt Hole Spacing J	104.8 mm 4.126 in
Bolt Hole Width N	11.1 mm 0.437 in
Bolt Hole Length N1	20.6 mm 0.811 in
Base Height H1	15.1 mm 0.594 in
Total Height H2	71.4 mm 2.811 in
Dimension L1	46.6 mm 1.835 in
Inside Ring Width B	N/A
Center of Bearing from End S	8.8 mm 0.346 in

Basic Load Ratings

Static Load Rating	1700 lbf 7700 N

Dynamic Load Rating	3600 lbf 15800 N

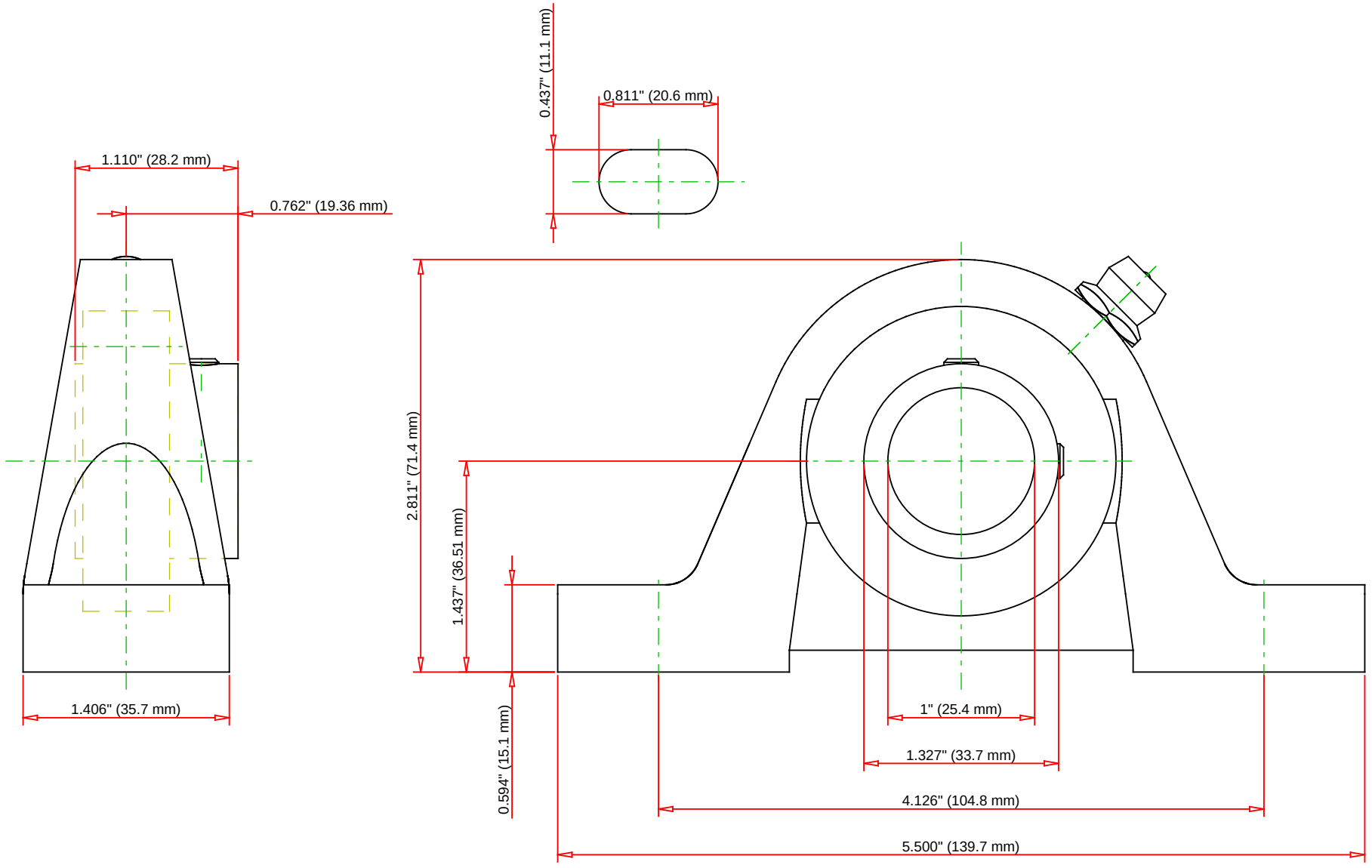

Bearing Number	GYA100RRB				
Load Ratings - C_r	3550	lbf	15800	N	
Load Ratings - C_{0r}	1730	lbf	7700	N	
Weight	1.653	lb	0.75	kg	
Bolt Size	M6x1				

TIMKEN

THE TIMKEN COMPANY
NORTH CANTON, OHIO USA

SAS 1

Pillow Block Units Setscrew Locking (Includes Industrial and Standard Series)

Every reasonable effort has been made to ensure the accuracy of the information contained in this writing, but no liability is accepted for errors, omissions or for any other reason.

FOR DISCUSSION ONLY