The Timken Company
4500 Mt Pleasant St. NW
N. Canton, OH 44720
Phone: (234) 262-3000
E-Mail: CustomerCAD@timken.com • **Web site:** www.timken.com

Part Number YCJ 20 SGT, Fafnir® Four-Bolt Flanged Units Setscrew Locking



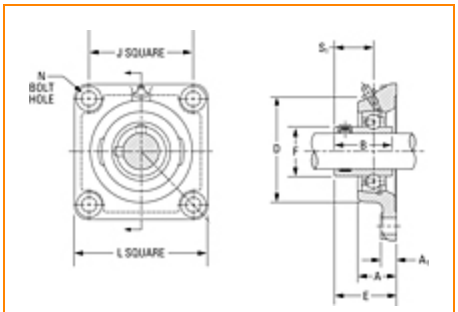

Specifications | Dimensions | Basic Load Ratings

Specifications

Shaft Size d	0.787 in 20 mm
Bearing Number	GYE20KRRB SGT
Dimension D	2.374 in 60.3 mm
Dimension E	1.512 in 38.4 mm
Inside Ring Outside Diameter	1.085 in 27.56 mm
Series	Industrial
Weight	1.6 lb 0.73 Kg
Seal Type	Shroud Seal

Housing Construction	Four-Bolt Square Flange
Alternate Part Name	YCJ20 SGT

Dimensions

Total Length L	85.7 mm 3.374 in
Housing Width A	1.094 in 27.8 mm
Bolt Hole Size N	10 mm 0.394 in
Flange Thickness A1	11.1 mm 0.437 in
Center of Bearing from Housing End A2	19.30 mm 0.760 in
Inside Ring Width B	N/A
Total Height	85.7 mm 3.374 in
Bolt Size	M10
Center of Bearing from Bearing End S	12.7 mm 0.500 in

Basic Load Ratings

Static Load Rating	1460 lbf 6500 N
Dynamic Load Rating	3190 lbf 14200 N

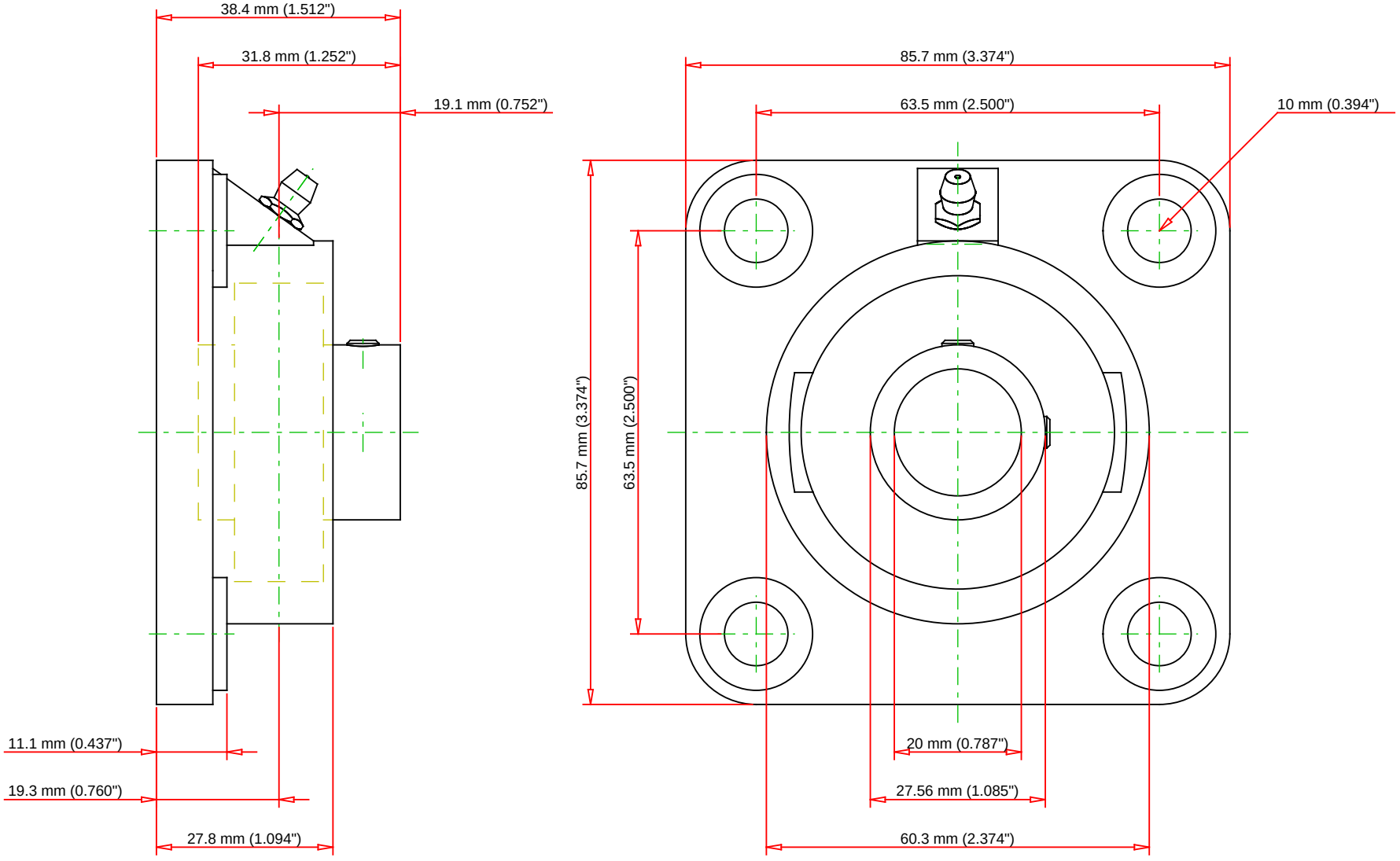

Bearing Number	GYE20KRRB SGT				
Load Ratings - C_r	3200	lbf	14300	N	
Load Ratings - C_{0r}	1400	lbf	6200	N	
Weight	0	lb	0	kg	
Bolt Size	M5x0.8				

TIMKEN

THE TIMKEN COMPANY
NORTH CANTON, OHIO USA

YCJ 20 SGT

Fafnir® Four-Bolt Flanged Units Setscrew Locking

Every reasonable effort has been made to ensure the accuracy of the information contained in this writing, but no liability is accepted for errors, omissions or for any other reason.

FOR DISCUSSION ONLY