The Timken Company
4500 Mt Pleasant St. NW
N. Canton, OH 44720
Phone: (234) 262-3000
E-Mail: CustomerCAD@timken.com • **Web site:** www.timken.com

Part Number GY1014KRRB SGT, Fafnir® Wide Inner Ring Setscrew Locking Ball Bearings



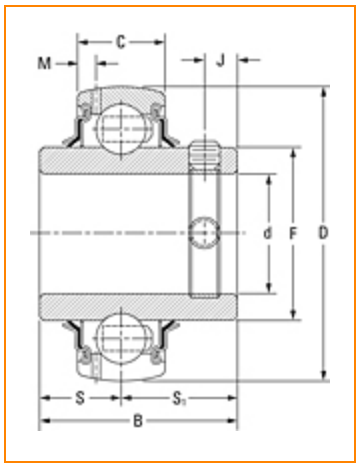

Specifications | Dimensions | Basic Load Ratings

Specifications

Shaft Size d	7/8 in 22.2 mm
Bore Type	Cylindrical bore
Bearing Type	Ball Bearing
Material	Bearing Steel
Lubrication Type	Relubricatable
O.D. Type	Spherical OD
Dimension M	0.152 in 3.86 mm
Series	Industrial
Weight	0.50 lb 0.2 Kg

Sub Series	GY...KRRB SGT
Alternate Part Name	GY1014KRRBSGT
Seal Type	Shroud Seal

Dimensions

Outside Diameter D	2.047 in 52.000 mm
Inner Ring Width B	34.85 mm 1.372 in
Outside Ring Width C	15.000 mm 0.591 in
Radius r	0.6 mm 0.024 in
Center of Bearing from End S	14.27 mm 0.562 in
Dimension S1	20.56 mm 0.809 in
Set Screw Distance S2	6.80 mm 0.268 in
Set Screw Size	M6x1
Number of Set Screws	2
Angle between Set Screws	90 °

Basic Load Ratings

Static Load Rating	1750 lbf 7800 N
Dynamic Load Rating	3490 lbf 15500 N

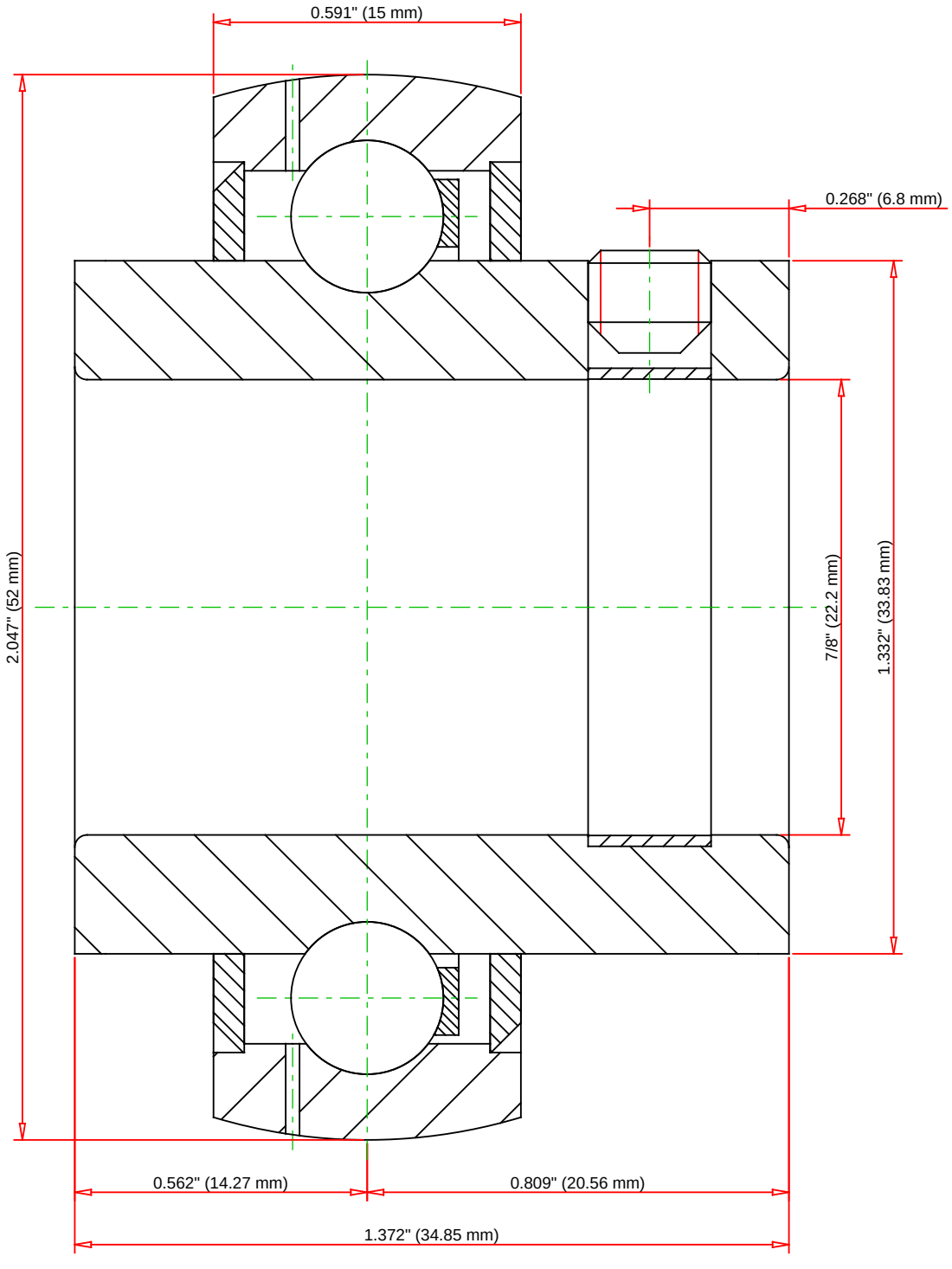

Weight	0.5 lb	0.2 kg

TIMKEN®

THE TIMKEN COMPANY
NORTH CANTON, OHIO USA

GY1014KRRB SGT

Fafnir® Wide Inner Ring Setscrew Locking Ball Bearings

Basic Load Ratings - C_r	3550 lbf	15800 N
Load Ratings - C_{0r}	1730 lbf	7700 N

Every reasonable effort has been made to ensure the accuracy of the information contained in this writing, but no liability is accepted for errors, omissions or for any other reason.

FOR DISCUSSION ONLY