**The Timken Company**
4500 Mt Pleasant St. NW
N. Canton, OH 44720
**Phone:** (234) 262-3000
**E-Mail:** CustomerCAD@timken.com • **Web site:** www.timken.com

# Timken Part Number VCJT 1 11/16, Two-Bolt Flanged Units Eccentric Locking Collar (Includes Industrial and Standard Series)



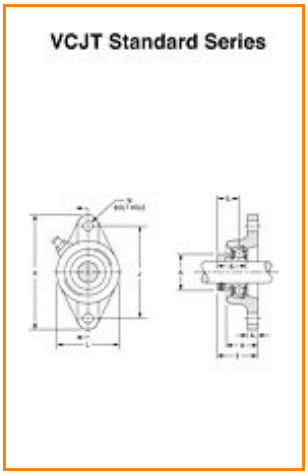


Specifications | Dimensions | Basic Load Ratings

## Specifications

| | |
|---|---|
| **Bore Size d** | 1 11/16 in<br>42.9 mm |
| **Bearing Number** | GRA111RRB |
| **Dimension E** | 2.244 in<br>57 mm |
| **Inside Ring Outside Diameter** | 2.480 in<br>63 mm |
| **Series** | Standard |
| **Weight** | 4.914 lb<br>2.229 Kg |
| **Seal Type** | Molded Shroud |

## Dimensions

| | |
|---|---|
| **Total Width A** | 38.9 mm<br>1.531 in |
| **Total Length H** | 179.4 mm<br>7.063 in |
| **Total Height L** | 111.1 mm<br>4.374 in |
| **Bolt Hole Spacing J** | 148 mm<br>5.827 in |
| **Bolt Hole Size N** | 13.1 mm<br>0.516 in |
| **Flange Thickness A1** | 12.7 mm<br>0.500 in |
| **Center of Bearing from Housing End A2** | 24.5 mm<br>0.965 in |
| **Inside Ring Width B** | 43.7 mm<br>1.720 in |
| **Center of Bearing from Bearing End S** | 24.5 mm<br>0.965 in |

## Basic Load Ratings

| | |
|---|---|
| **Static Load Rating** | 8200 lbf<br>36300 N |
| **Dynamic Load Rating** | 4600 lbf<br>20500 N |

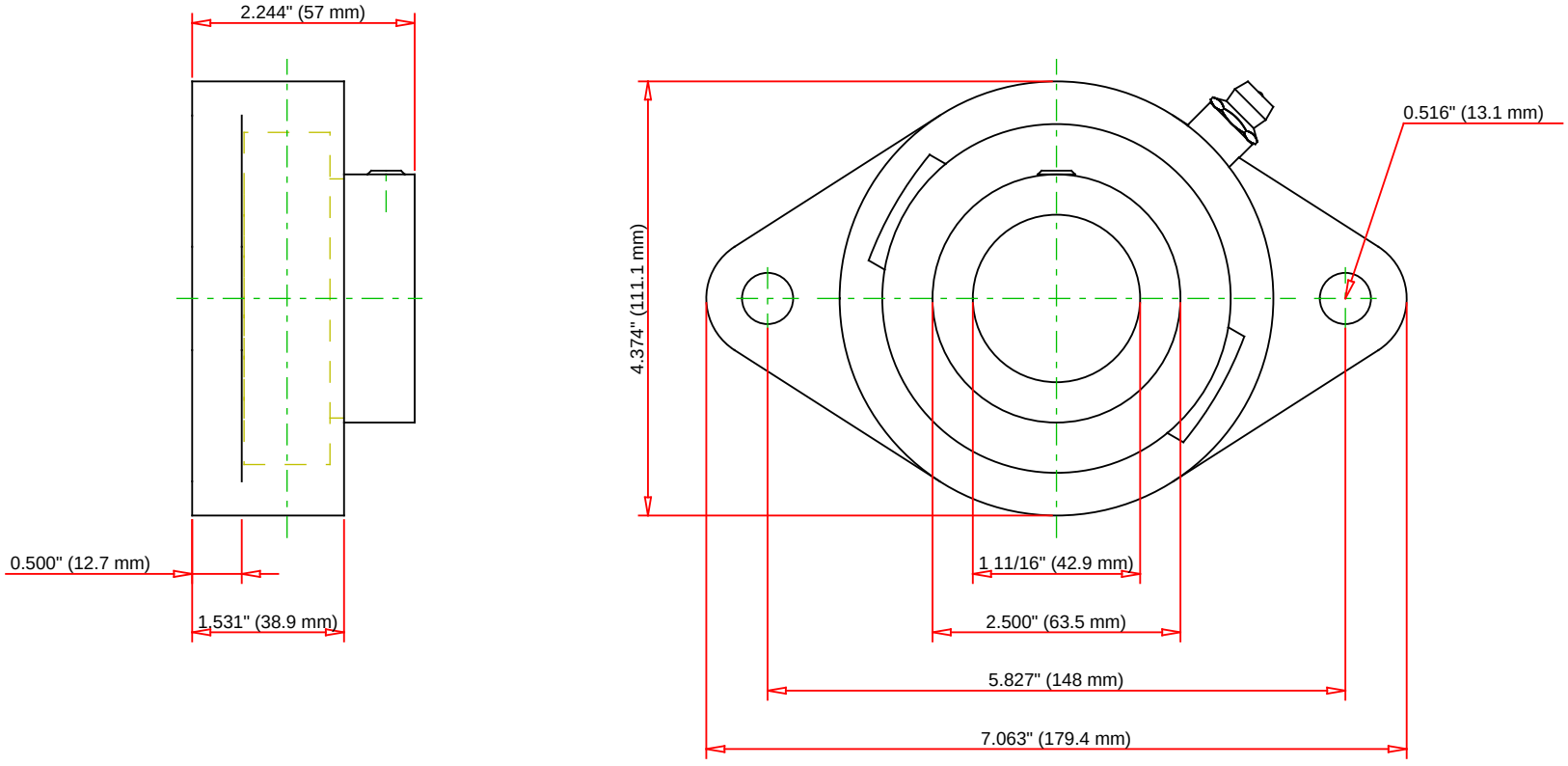


| | | | | |
|---|---|---|---|---|
| Bearing Number | GRA111RRB | | | |
| Load Ratings - $C_r$ | 8160 | lbf | 36300 | N |
| Load Ratings - $C_{0r}$ | 4600 | lbf | 20500 | N |
| Weight | 4.914 | lb | 2.229 | kg |
| | | | | |

TIMKEN

THE TIMKEN COMPANY
NORTH CANTON, OHIO USA

# VCJT 1 11/16

Two-Bolt Flanged Units Eccentric Locking Collar
(Includes Industrial and Standard Series)

Every reasonable effort has been made to ensure the accuracy of the information contained in this writing, but no liability is accepted for errors, omissions or for any other reason.

FOR DISCUSSION ONLY