The Timken Company
4500 Mt Pleasant St. NW
N. Canton, OH 44720
Phone: (234) 262-3000
E-Mail: CustomerCAD@timken.com • **Web site:** www.timken.com

Timken Part Number RAO 1 11/16, Pillow Block Units Eccentric Locking Collar (Includes Industrial and Standard Series)





Specifications | Dimensions | Basic Load Ratings

Specifications

Bore Size d	1 11/16 in 42.9 mm
Bearing Number	GN111KRRB
Inside Ring Outside Diameter	0.811 in 20.6 mm
Dimension B1	2.311 in 58.7 mm
Dimension T	1.315 in 33.4 mm
Series	Medium-Duty
Weight	11.089 lb 5.03 Kg
Seal Type	Shroud Seal

Dimensions

Shaft Height H	66.68 mm 2.625 in
Total Length L	239.7 mm 9.437 in
Total Width A	2.626 in 66.7 mm
Bolt Hole Spacing J	190.5 mm 7.500 in
Bolt Hole Width N	19 mm 0.748 in
Bolt Hole Length N1	25.4 mm 1.000 in
Base Height H1	30.2 mm 1.189 in
Total Height H2	130.2 mm 5.126 in
Dimension L1	79.9 mm 3.146 in
Inside Ring Width B	N/A
Center of Bearing from End S	19.8 mm 0.780 in

Basic Load Ratings

Static Load Rating	6700 lbf 30000 N
Dynamic Load Rating	13200 lbf 58500 N

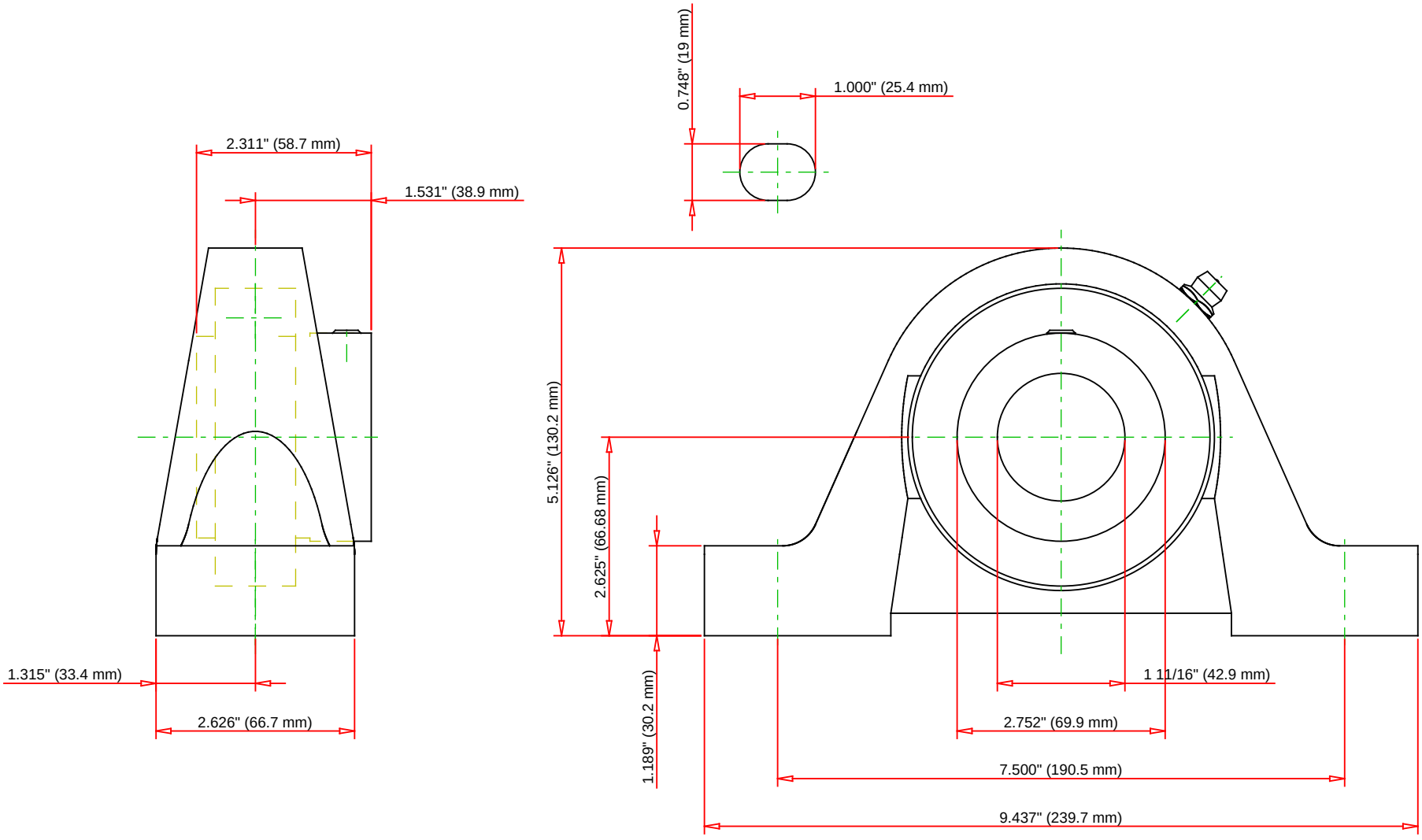

Bearing Number	GN111KRRB			
Load Ratings - C_r	13200	lbf	58500	N
Load Ratings - C_{0r}	6700	lbf	30000	N
Weight	11.089	lb	5.03	kg

TIMKEN

THE TIMKEN COMPANY
NORTH CANTON, OHIO USA

RAO 1 11/16

Pillow Block Units Eccentric Locking Collar
(Includes Industrial and Standard Series)

Every reasonable effort has been made to ensure the accuracy of the information contained in this writing, but no liability is accepted for errors, omissions or for any other reason.

FOR DISCUSSION ONLY