The Timken Company
4500 Mt Pleasant St. NW
N. Canton, OH 44720
Phone: (234) 262-3000
E-Mail: CustomerCAD@timken.com • **Web site:** www.timken.com

Timken Part Number HM911245 - HM911210, Tapered Roller Bearings - TS (Tapered Single) Imperial

This is the most basic and most widely used type of tapered roller bearing. It consists of two main separable parts: the cone (inner ring) assembly and the cup (outer ring). It is typically mounted in opposing pairs on a shaft.



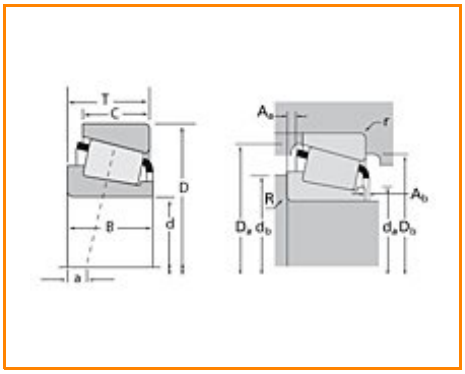

Specifications | Dimensions | Abutment and Fillet Dimensions | Basic Load Ratings | Factors

Specifications

Series	HM911200
Cone Part Number	HM911245
Cup Part Number	HM911210
Design Units	Imperial
Bearing Weight	2.100 Kg 4.50 lb
Cage Type	Stamped Steel

Dimensions

d - Bore	60.325 mm 2.3750 in
D - Cup Outer Diameter	130.175 mm 5.1250 in
B - Cone Width	33.338 mm 1.3125 in
C - Cup Width	23.813 mm 0.9375 in
T - Bearing Width	36.513 mm 1.4375 in

Abutment and Fillet Dimensions

R - Cone Backface "To Clear" Radius[1]	5.080 mm 0.2 in
r - Cup Backface "To Clear" Radius[2]	3.30 mm 0.130 in
da - Cone Frontface Backing Diameter	73.91 mm 2.91 in
db - Cone Backface Backing Diameter	92.96 mm 3.66 in
Da - Cup Frontface Backing Diameter	123.95 mm 4.88 in
Db - Cup Backface Backing Diameter	108.97 mm 4.29 in
Ab - Cage-Cone Frontface Clearance	5.1 mm 0.2 in
Aa - Cage-Cone Backface Clearance	6.3 mm 0.25 in
a - Effective Center Location[3]	5.30 mm 0.21 in

Basic Load Ratings

C90 - Dynamic Radial Rating (90 million revolutions)[4]	51200 N 11500 lbf
C1 - Dynamic Radial Rating (1 million revolutions)[5]	198000 N 44400 lbf
C0 - Static Radial Rating	183000 N 41100 lbf
C_{a90} - Dynamic Thrust Rating (90 million revolutions)[6]	71900 N 16200 lbf

Factors

K - Factor[7]	0.71
e - ISO Factor[8]	0.82
Y - ISO Factor[9]	0.73
G1 - Heat Generation Factor (Roller-Raceway)	56.4
G2 - Heat Generation Factor (Rib-Roller End)	16.5
Cg - Geometry Factor	0.0842

[1] These maximum fillet radii will be cleared by the bearing corners.

[2] These maximum fillet radii will be cleared by the bearing corners.

[3] Negative value indicates effective center inside cone backface.

[4] Based on 90 x 10^6 revolutions L_{10} life, for The Timken Company life calculation method. C_{90} and C_{a90} are radial and thrust values.

[5] Based on 1 x 10^6 revolutions L_{10} life, for the ISO life calculation method.

[6] Based on 90 x 10^6 revolutions L_{10} life, for The Timken Company life calculation method. C_{90} and C_{a90} are radial and thrust values for a single-row, $C_{90(2)}$ is the two-row radial value.

[7] These factors apply for both inch and metric calculations. Consult your Timken representative for instruction on use.

[8] These factors apply for both inch and metric calculations. Consult your Timken representative for instruction

on use.

[9] These factors apply for both inch and metric calculations. Consult your Timken representative for instruction on use.

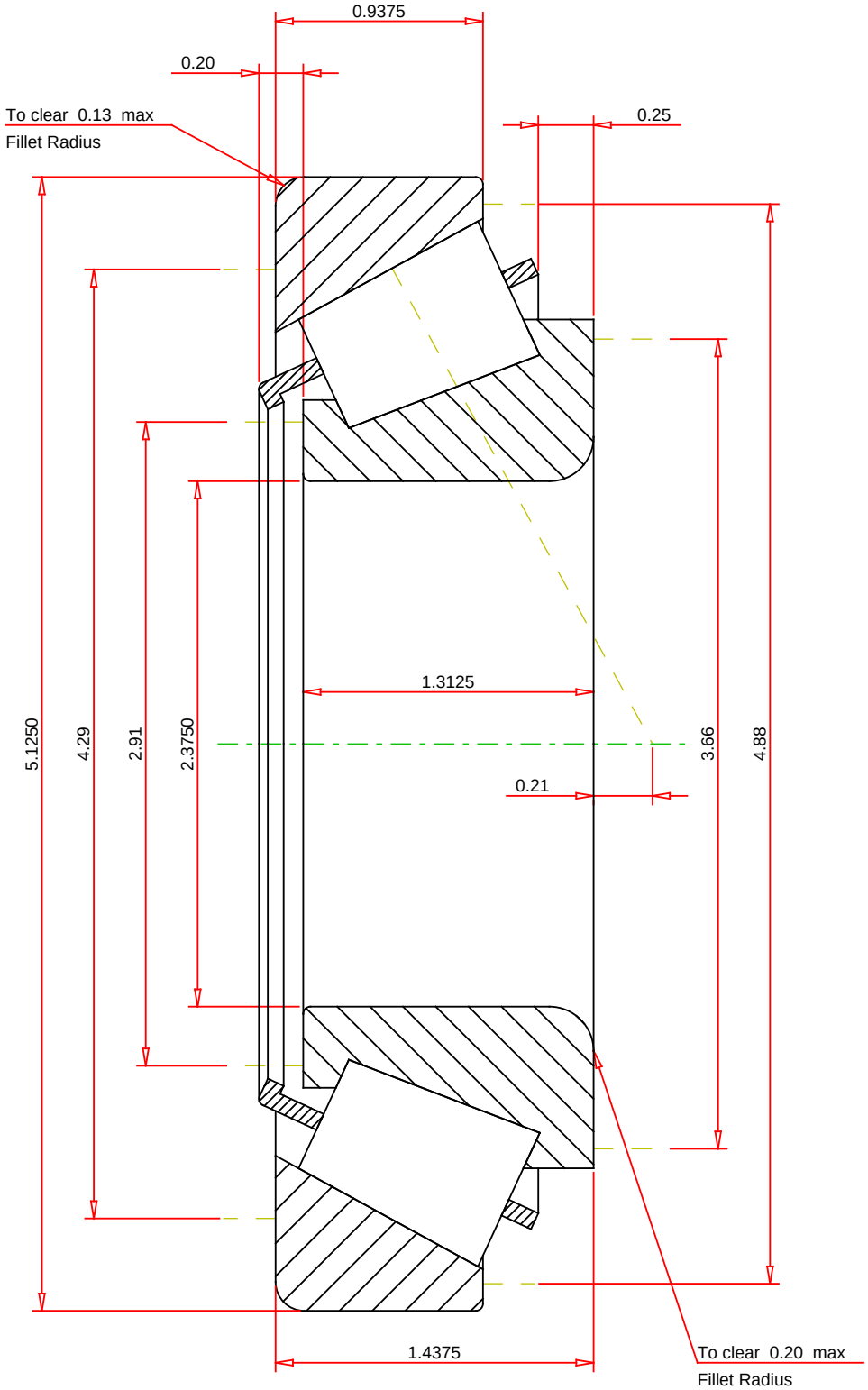

IMPERIAL UNITS

ISO Factor - e	0.82	
ISO Factor - Y	0.73	
Bearing Weight	4.5	lb
Number of Rollers Per Row	15	
Effective Center Location	0.21	inch

TIMKEN®

THE TIMKEN COMPANY
NORTH CANTON, OHIO USA

HM911245 - HM911210
TS BEARING ASSEMBLY

K Factor	0.71	
Dynamic Radial Rating - C90	51200	lbf
Dynamic Thrust Rating - Ca90	71900	lbf
Static Radial Rating - C0	183000	lbf
Dynamic Radial Rating - C1	198000	lbf

Every reasonable effort has been made to ensure the accuracy of the information contained in this writing, but no liability is accepted for errors, omissions or for any other reason.

FOR DISCUSSION ONLY