The Timken Company
4500 Mt Pleasant St. NW
N. Canton, OH 44720
Phone: (234) 262-3000
E-Mail: CustomerCAD@timken.com • **Web site:** www.timken.com

Timken Part Number JM718149 - JM718110, Tapered Roller Bearings - TS (Tapered Single) Metric

This is the most basic and most widely used type of tapered roller bearing. It consists of two main separable parts: the cone (inner ring) assembly and the cup (outer ring). It is typically mounted in opposing pairs on a shaft.



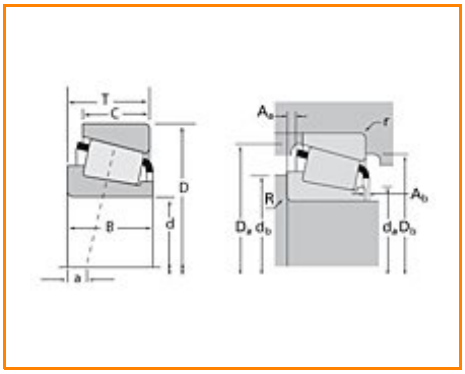

Specifications | Dimensions | Abutment and Fillet Dimensions | Basic Load Ratings | Factors

Specifications

Series	M718100
Cone Part Number	JM718149
Cup Part Number	JM718110
Design Units	METRIC
Bearing Weight	2.100 Kg 4.70 lb
Cage Type	Stamped Steel

Dimensions

d - Bore	90 mm 3.5433 in
D - Cup Outer Diameter	145.000 mm 5.7087 in
B - Cone Width	34.000 mm 1.3386 in
C - Cup Width	27 mm 1.063 in
T - Bearing Width	35.000 mm 1.3780 in

Abutment and Fillet Dimensions

R - Cone Backface "To Clear" Radius[1]	3.050 mm 0.12 in
r - Cup Backface "To Clear" Radius[2]	2.54 mm 0.1 in
da - Cone Frontface Backing Diameter	99.06 mm 3.90 in
db - Cone Backface Backing Diameter	105.92 mm 4.17 in
Da - Cup Frontface Backing Diameter	138.94 mm 5.47 in
Db - Cup Backface Backing Diameter	131.06 mm 5.16 in
Ab - Cage-Cone Frontface Clearance	4.6 mm 0.18 in
Aa - Cage-Cone Backface Clearance	1.5 mm 0.06 in
a - Effective Center Location[3]	-2 mm -0.08 in

Basic Load Ratings

C90 - Dynamic Radial Rating (90 million revolutions)[4]	57700 N 13000 lbf
C1 - Dynamic Radial Rating (1 million revolutions)[5]	222000 N 50000 lbf
C0 - Static Radial Rating	313000 N 70500 lbf
C_{a90} - Dynamic Thrust Rating (90 million revolutions)[6]	43900 N 9860 lbf

Factors

K - Factor[7]	1.31
e - ISO Factor[8]	0.44
Y - ISO Factor[9]	1.35
G1 - Heat Generation Factor (Roller-Raceway)	138
G2 - Heat Generation Factor (Rib-Roller End)	35.1
Cg - Geometry Factor	0.0946

[1] These maximum fillet radii will be cleared by the bearing corners.

[2] These maximum fillet radii will be cleared by the bearing corners.

[3] Negative value indicates effective center inside cone backface.

[4] Based on 90 x 10^6 revolutions L_{10} life, for The Timken Company life calculation method. C_{90} and C_{a90} are radial and thrust values.

[5] Based on 1 x 10^6 revolutions L_{10} life, for the ISO life calculation method.

[6] Based on 90 x 10^6 revolutions L_{10} life, for The Timken Company life calculation method. C_{90} and C_{a90} are radial and thrust values for a single-row, $C_{90(2)}$ is the two-row radial value.

[7] These factors apply for both inch and metric calculations. Consult your Timken representative for instruction on use.

[8] These factors apply for both inch and metric calculations. Consult your Timken representative for instruction

on use.

[9] These factors apply for both inch and metric calculations. Consult your Timken representative for instruction on use.

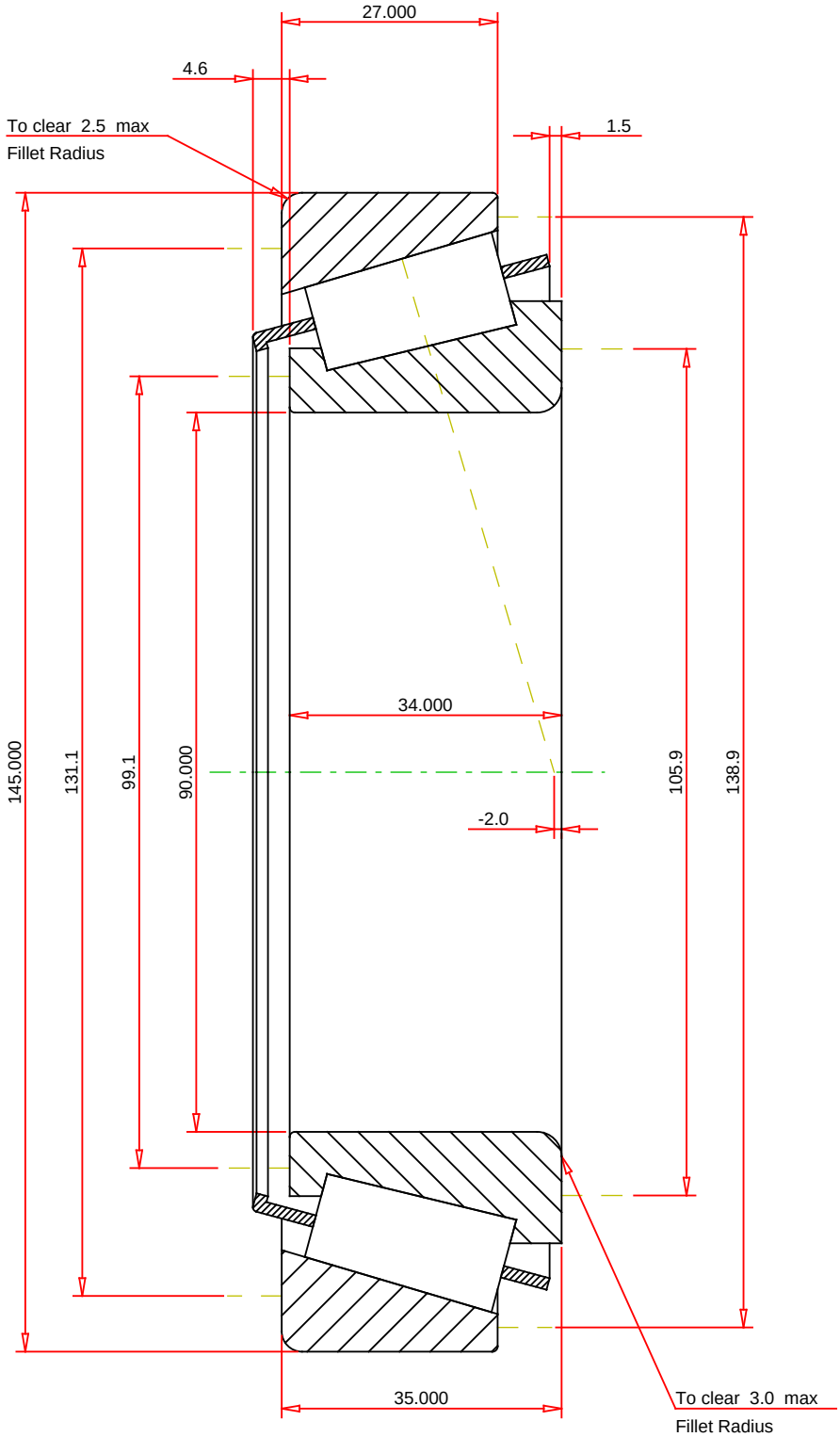

METRIC UNITS

ISO Factor - e	0.44	
ISO Factor - Y	1.35	
Bearing Weight	2.1	kg
Number of Rollers Per Row	22	
Effective Center Location	-2	mm

TIMKEN®

THE TIMKEN COMPANY
NORTH CANTON, OHIO USA

JM718149 - JM718110
TS BEARING ASSEMBLY

K Factor	1.31	
Dynamic Radial Rating - C90	57700	N
Dynamic Thrust Rating - Ca90	43900	N
Static Radial Rating - C0	313000	N
Dynamic Radial Rating - C1	222000	N

Every reasonable effort has been made to ensure the accuracy of the information contained in this writing, but no liability is accepted for errors, omissions or for any other reason.

FOR DISCUSSION ONLY