The Timken Company
4500 Mt Pleasant St. NW
N. Canton, OH 44720
Phone: (234) 262-3000
E-Mail: CustomerCAD@timken.com • **Web site:** www.timken.com

Timken Part Number L225842 - L225810, Tapered Roller Bearings - TS (Tapered Single) Imperial

This is the most basic and most widely used type of tapered roller bearing. It consists of two main separable parts: the cone (inner ring) assembly and the cup (outer ring). It is typically mounted in opposing pairs on a shaft.



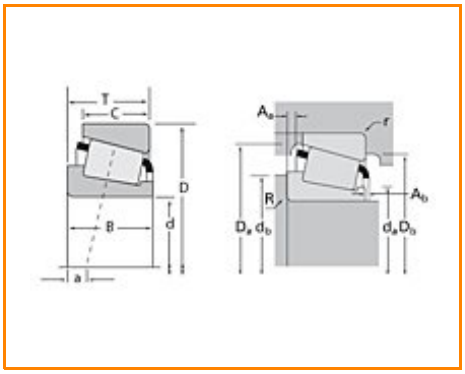

Specifications | Dimensions | Abutment and Fillet Dimensions | Basic Load Ratings | Factors

Specifications

Series	L225800
Cone Part Number	L225842
Cup Part Number	L225810
Design Units	Imperial
Bearing Weight	1.800 Kg 4.00 lb
Cage Type	Stamped Steel

Dimensions

d - Bore	120.650 mm 4.7500 in
D - Cup Outer Diameter	169.863 mm 6.6875 in
B - Cone Width	26.195 mm 1.0313 in
C - Cup Width	20.638 mm 0.8125 in
T - Bearing Width	25.400 mm 1.0000 in

Abutment and Fillet Dimensions

R - Cone Backface "To Clear" Radius[1]	1.520 mm 0.06 in
r - Cup Backface "To Clear" Radius[2]	1.52 mm 0.06 in
da - Cone Frontface Backing Diameter	129.03 mm 6.05 in
db - Cone Backface Backing Diameter	131.06 mm 5.16 in
Da - Cup Frontface Backing Diameter	164.10 mm 6.48 in
Db - Cup Backface Backing Diameter	160.02 mm 6.3 in
Ab - Cage-Cone Frontface Clearance	2.3 mm 0.09 in
Aa - Cage-Cone Backface Clearance	0.5 mm 0.02 in
a - Effective Center Location[3]	2.5 mm 0.1 in

Basic Load Ratings

C90 - Dynamic Radial Rating (90 million revolutions)[4]	37000 N 8320 lbf
C1 - Dynamic Radial Rating (1 million revolutions)[5]	143000 N 32100 lbf
C0 - Static Radial Rating	273000 N 61400 lbf
C_{a90} - Dynamic Thrust Rating (90 million revolutions)[6]	21100 N 4740 lbf

Factors

K - Factor[7]	1.76
e - ISO Factor[8]	0.33
Y - ISO Factor[9]	1.8
G1 - Heat Generation Factor (Roller-Raceway)	253
G2 - Heat Generation Factor (Rib-Roller End)	134
Cg - Geometry Factor	0.151

[1] These maximum fillet radii will be cleared by the bearing corners.

[2] These maximum fillet radii will be cleared by the bearing corners.

[3] Negative value indicates effective center inside cone backface.

[4] Based on 90 x 10^6 revolutions L_{10} life, for The Timken Company life calculation method. C_{90} and C_{a90} are radial and thrust values.

[5] Based on 1 x 10^6 revolutions L_{10} life, for the ISO life calculation method.

[6] Based on 90 x 10^6 revolutions L_{10} life, for The Timken Company life calculation method. C_{90} and C_{a90} are radial and thrust values for a single-row, $C_{90(2)}$ is the two-row radial value.

[7] These factors apply for both inch and metric calculations. Consult your Timken representative for instruction on use.

[8] These factors apply for both inch and metric calculations. Consult your Timken representative for instruction

on use.

[9] These factors apply for both inch and metric calculations. Consult your Timken representative for instruction on use.

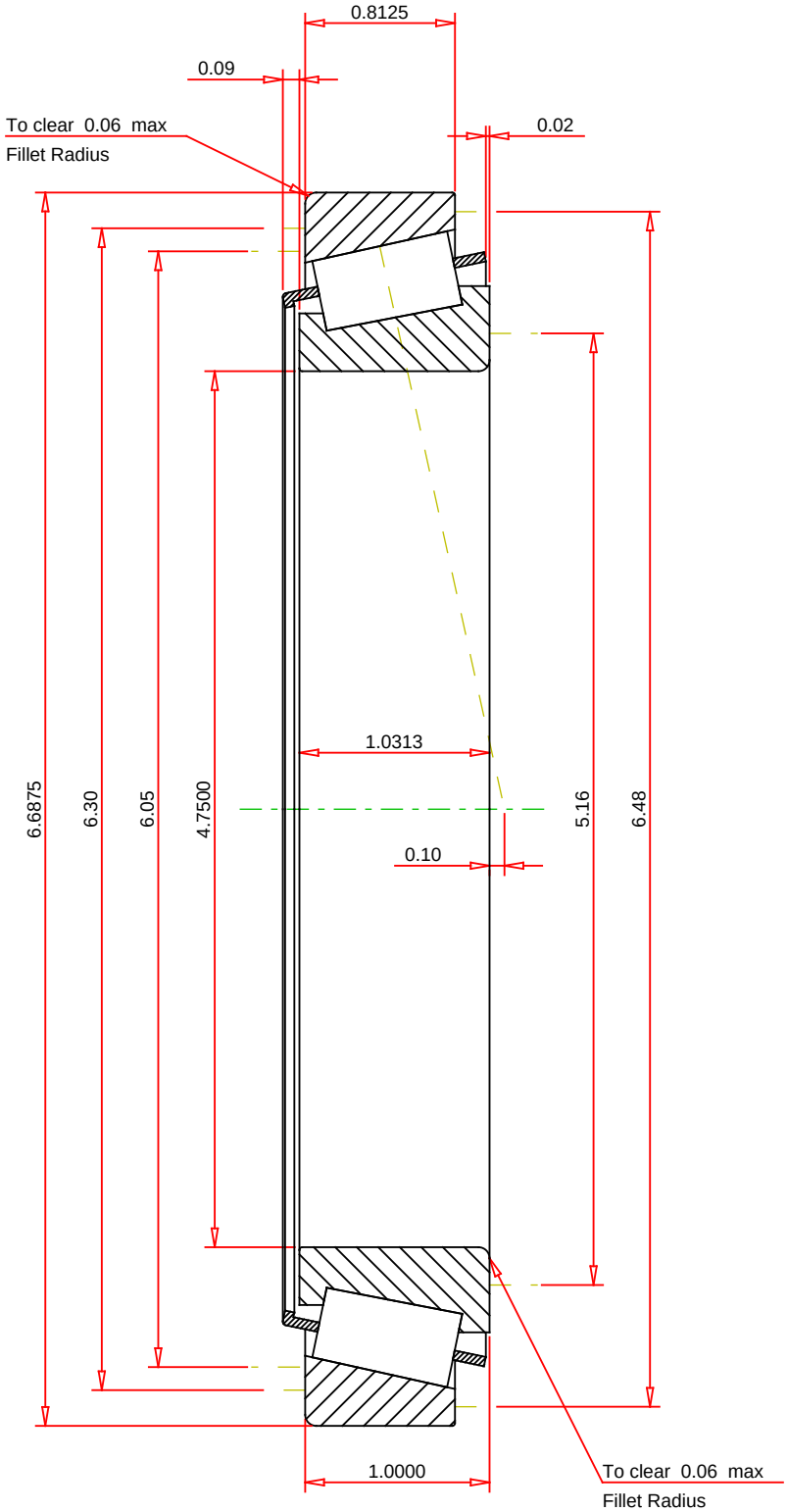

IMPERIAL UNITS

ISO Factor - e	0.33	
ISO Factor - Y	1.8	
Bearing Weight	4	lb
Number of Rollers Per Row	40	
Effective Center Location	0.1	inch

TIMKEN®

THE TIMKEN COMPANY
NORTH CANTON, OHIO USA

L225842 - L225810
TS BEARING ASSEMBLY

K Factor	1.76	
Dynamic Radial Rating - C90	37000	lbf
Dynamic Thrust Rating - Ca90	21100	lbf
Static Radial Rating - C0	273000	lbf
Dynamic Radial Rating - C1	143000	lbf

Every reasonable effort has been made to ensure the accuracy of the information contained in this writing, but no liability is accepted for errors, omissions or for any other reason.

FOR DISCUSSION ONLY