The Timken Company
4500 Mt Pleasant St. NW
N. Canton, OH 44720
Phone: (234) 262-3000
E-Mail: CustomerCAD@timken.com • **Web site:** www.timken.com

Part Number YCJM1 1/2, Fafnir® Four-Bolt Flanged Units Setscrew Locking



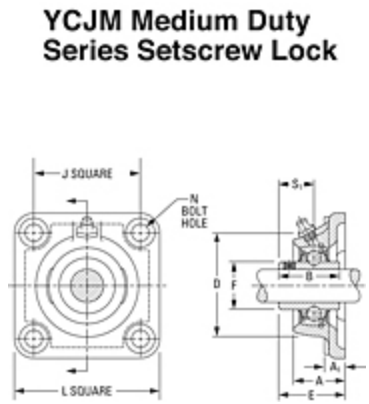

Specifications | Dimensions | Basic Load Ratings

Specifications

Shaft Size d	1 1/2 in 38.1 mm
Bearing Number	GYM1108KRRB
Dimension D	4.126 in 104.8 mm
Dimension E	2.142 in 54.4 mm
Inside Ring Outside Diameter	2.280 in 57.92 mm
Series	Medium-Duty
Weight	5.78 lb 2.62 Kg
Seal Type	Shroud Seal

Housing Construction	Four-Bolt Square Flange
Alternate Part Name	YCJM11/2

Dimensions

Total Length L	136.5 mm 5.374 in
Housing Width A	1.531 in 38.9 mm
Bolt Hole Size N	12 mm 0.472 in
Flange Thickness A1	14.3 mm 0.563 in
Center of Bearing from Housing End A2	24.2 mm 0.953 in
Inside Ring Width B	N/A
Total Height	136.5 mm 5.374 in
Bolt Size	M12
Center of Bearing from Bearing End S	19 mm 0.748 in

Basic Load Ratings

Static Load Rating	4600 lbf 20500 N
Dynamic Load Rating	8160 lbf 36300 N

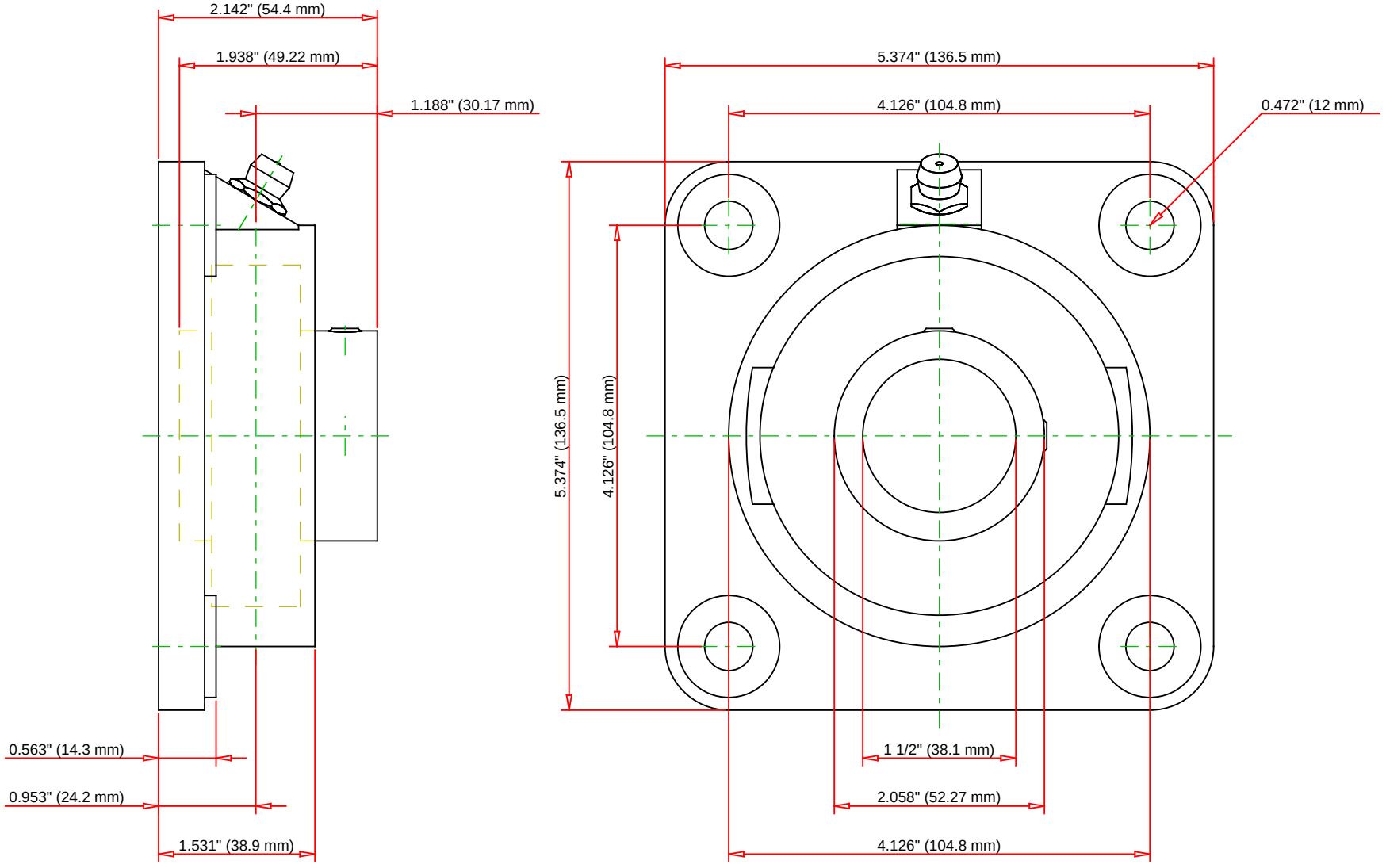

Bearing Number	GYM1108KRRB			
Load Ratings - C_r	8150	lbf	36300	N
Load Ratings - C_{0r}	4500	lbf	20000	N
Weight	0	lb	0	kg
Bolt Size	M8x1.25			

TIMKEN

THE TIMKEN COMPANY
NORTH CANTON, OHIO USA

YCJM1 1/2

Fafnir® Four-Bolt Flanged Units Setscrew Locking

Every reasonable effort has been made to ensure the accuracy of the information contained in this writing, but no liability is accepted for errors, omissions or for any other reason.

FOR DISCUSSION ONLY