The Timken Company
4500 Mt Pleasant St. NW
N. Canton, OH 44720
Phone: (234) 262-3000
E-Mail: CustomerCAD@timken.com • **Web site:** www.timken.com

Timken Part Number YCJ 1 SGT, Four-Bolt Flanged Units Setscrew Locking (Includes Industrial and Standard Series)



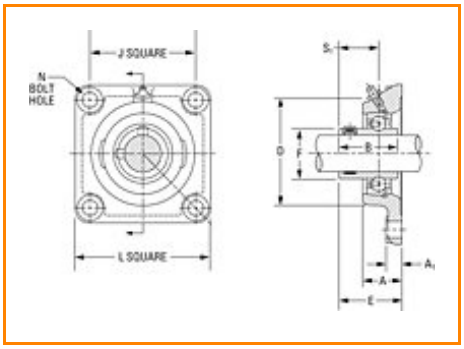

Specifications | Dimensions | Basic Load Ratings

Specifications

Bore Size d	1 in 25.4 mm
Bearing Number	GY1100KRRB SGT
Dimension D	2.563 in 65.1 mm
Dimension E	1.575 in 40 mm
Inside Ring Outside Diameter	1.334 in 33.88 mm
Series	Industrial
Weight	2.07 lb 0.94 Kg

Seal Type	Shroud Seal

Dimensions

Total Length L	95.2 mm 3.748 in
Total Width A	1.098 in 27.9 mm
Bolt Hole Size N	10 mm 0.394 in
Flange Thickness A1	12.7 mm 0.500 in
Center of Bearing from Housing End A2	19.4 mm 0.764 in
Inside Ring Width B	N/A
Total Height	95.2 mm 3.748 in
Bolt Size	M10
Center of Bearing from Bearing End S	14.3 mm 0.563 in

Basic Load Ratings

Static Load Rating	1730 lbf 7700 N
Dynamic Load Rating	3550 lbf 15800 N

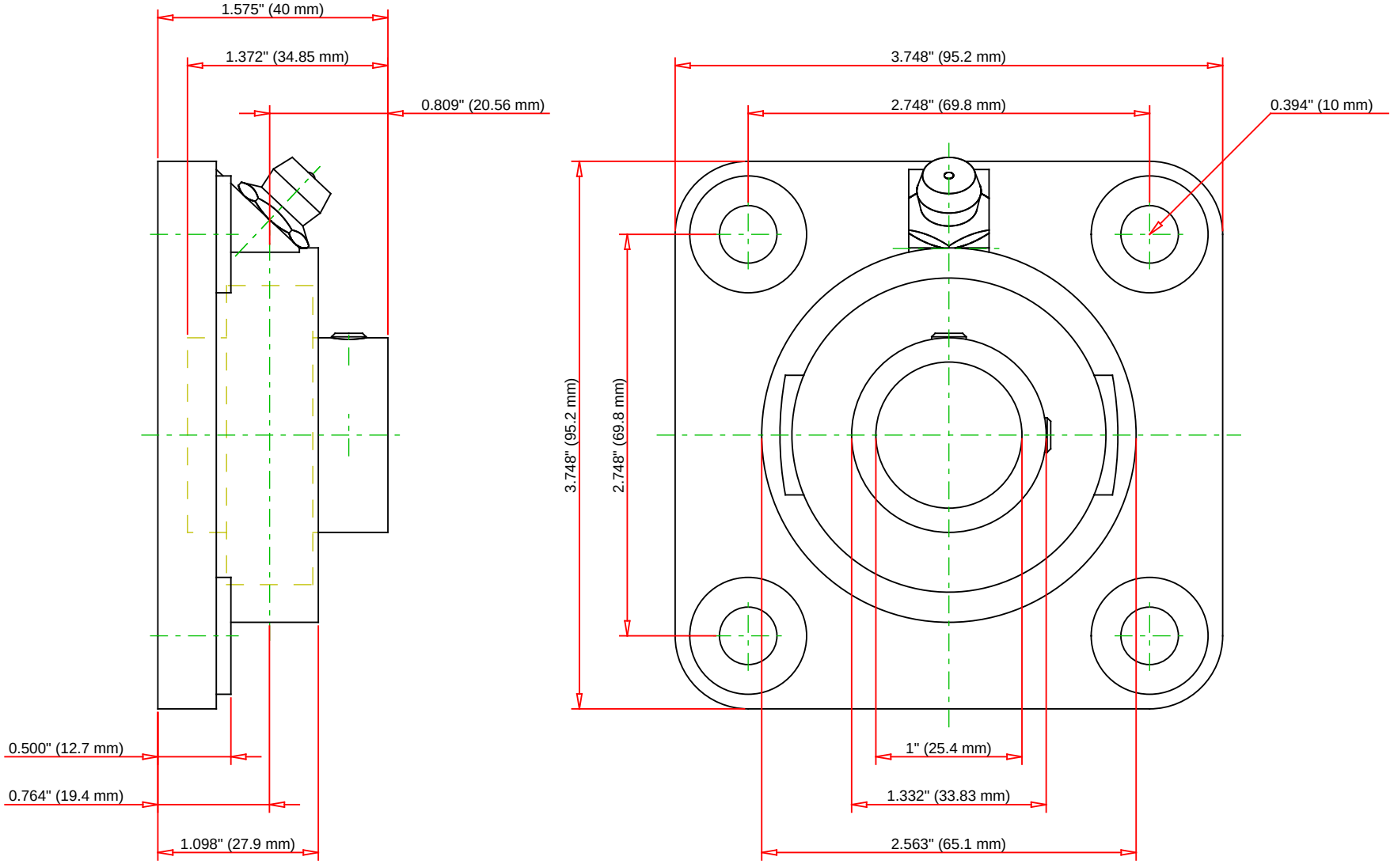

Bearing Number	GY1100KRRB SGT			
Load Ratings - C_r	3550	lbf	15800	N
Load Ratings - C_{0r}	1730	lbf	7700	N
Weight	0	lb	0	kg
Bolt Size	M6x1			

TIMKEN

THE TIMKEN COMPANY
NORTH CANTON, OHIO USA

YCJ 1 SGT

Four-Bolt Flanged Units Setscrew Locking
(Includes Industrial and Standard Series)

Every reasonable effort has been made to ensure the accuracy of the information contained in this writing, but no liability is accepted for errors, omissions or for any other reason.

FOR DISCUSSION ONLY