The Timken Company
4500 Mt Pleasant St. NW
N. Canton, OH 44720
Phone: (234) 262-3000
E-Mail: CustomerCAD@timken.com • **Web site:** www.timken.com

Part Number VCJT 25, Fafnir® Two-Bolt Flanged Units Eccentric Locking Collar



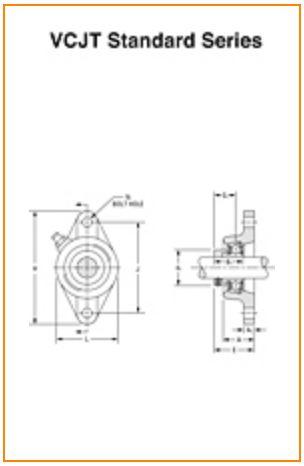

Specifications | Dimensions | Basic Load Ratings

Specifications

Shaft Size d	25 mm
Bearing Type	Ball Bearing
Bearing Number	GRAE25RRB
Dimension E	43.2 mm
Inside Ring Outside Diameter	23.9 mm
Series	Standard
Weight	0.74 Kg
Seal Type	Molded Shroud
Housing Construction	Two-Bolt Flange
Alternate Part Name	VCJT25

Dimensions

Housing Width A	27.9 mm
Total Length H	123.8 mm
Total Height L	69.8 mm
Bolt Hole Spacing J	99.2 mm
Bolt Hole Size N	11.5 mm
Flange Thickness A1	11.1 mm
Center of Bearing from Housing End A2	19.8 mm
Inside Ring Width B	31.00 mm
Center of Bearing from Bearing End S	19.8 mm

Basic Load Ratings

Static Load Rating	7800 N
Dynamic Load Rating	15500 N

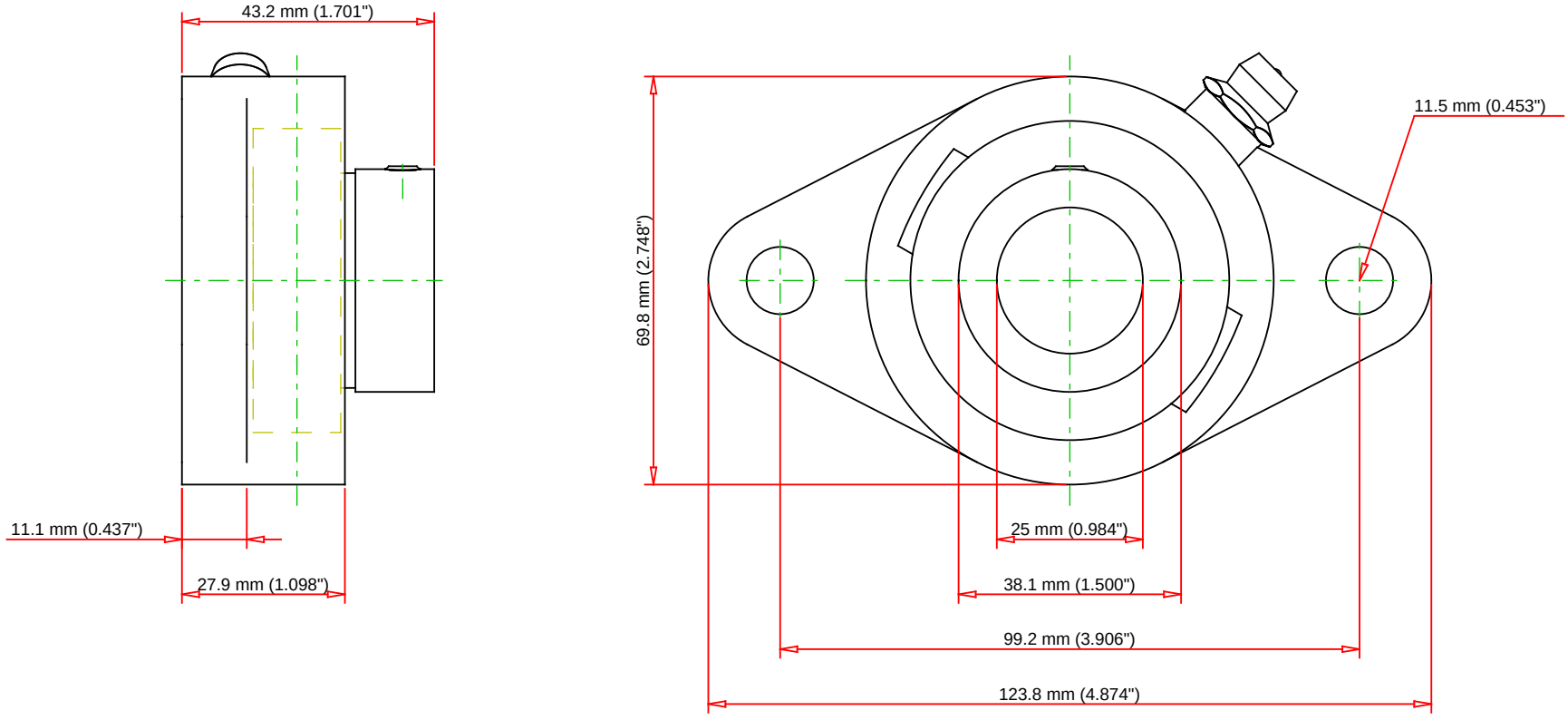

Bearing Number	GRAE25RRB				
Load Ratings - C_r	3490	lbf	15500	N	
Load Ratings - C_{0r}	1750	lbf	7800	N	
Weight	1.631	lb	0.74	kg	

TIMKEN

THE TIMKEN COMPANY
NORTH CANTON, OHIO USA

VCJT 25

Fafnir® Two-Bolt Flanged Units Eccentric Locking Collar

Every reasonable effort has been made to ensure the accuracy of the information contained in this writing, but no liability is accepted for errors, omissions or for any other reason.

FOR DISCUSSION ONLY