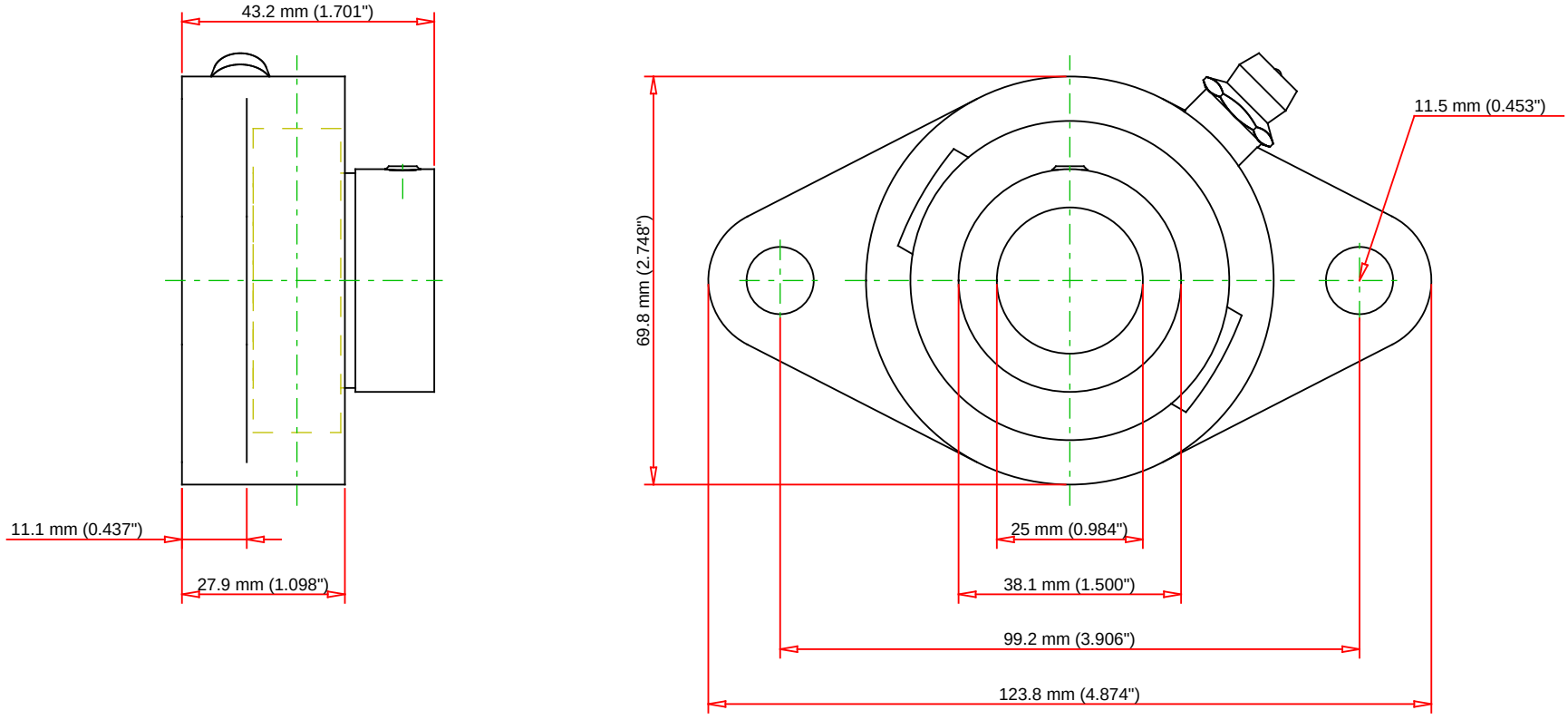

Bearing Number	GRAE25RRB				
Load Ratings - C_r	3490	lbf	15500	N	
Load Ratings - C_{0r}	1750	lbf	7800	N	
Weight	1.631	lb	0.74	kg	

TIMKEN

THE TIMKEN COMPANY
NORTH CANTON, OHIO USA

VCJT 25

Fafnir® Two-Bolt Flanged Units Eccentric Locking Collar

Every reasonable effort has been made to ensure the accuracy of the information contained in this writing, but no liability is accepted for errors, omissions or for any other reason.

FOR DISCUSSION ONLY