The Timken Company
4500 Mt Pleasant St. NW
N. Canton, OH 44720
Phone: (234) 262-3000
E-Mail: CustomerCAD@timken.com • **Web site:** www.timken.com

Timken Part Number JM714249 - JM714210, Tapered Roller Bearings - TS (Tapered Single) Metric

This is the most basic and most widely used type of tapered roller bearing. It consists of two main separable parts: the cone (inner ring) assembly and the cup (outer ring). It is typically mounted in opposing pairs on a shaft.



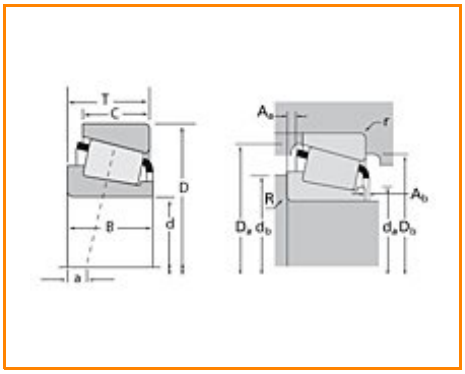

Specifications | Dimensions | Abutment and Fillet Dimensions | Basic Load Ratings | Factors

Specifications

Series	M714200
Cone Part Number	JM714249
Cup Part Number	JM714210
Design Units	METRIC
Bearing Weight	1.300 Kg 2.80 lb
Cage Type	Stamped Steel

Dimensions

d - Bore	75.000 mm 2.9528 in
D - Cup Outer Diameter	120.000 mm 4.7244 in
B - Cone Width	29.500 mm 1.1614 in
C - Cup Width	25.000 mm 0.9843 in
T - Bearing Width	31.000 mm 1.2205 in

Abutment and Fillet Dimensions

R - Cone Backface "To Clear" Radius[1]	3.050 mm 0.12 in
r - Cup Backface "To Clear" Radius[2]	2.54 mm 0.1 in
da - Cone Frontface Backing Diameter	82.80 mm 3.26 in
db - Cone Backface Backing Diameter	87.88 mm 3.46 in
Da - Cup Frontface Backing Diameter	115.10 mm 4.56 in
Db - Cup Backface Backing Diameter	107.95 mm 4.25 in
Ab - Cage-Cone Frontface Clearance	3.3 mm 0.13 in
Aa - Cage-Cone Backface Clearance	1.5 mm 0.06 in
a - Effective Center Location[3]	-2 mm -0.08 in

Basic Load Ratings

C90 - Dynamic Radial Rating (90 million revolutions)[4]	41300 N 9290 lbf
C1 - Dynamic Radial Rating (1 million revolutions)[5]	159000 N 35800 lbf
C0 - Static Radial Rating	229000 N 51500 lbf
C_{a90} - Dynamic Thrust Rating (90 million revolutions)[6]	31400 N 7070 lbf

Factors

K - Factor[7]	1.31
e - ISO Factor[8]	0.44
Y - ISO Factor[9]	1.35
G1 - Heat Generation Factor (Roller-Raceway)	95
G2 - Heat Generation Factor (Rib-Roller End)	32.1
Cg - Geometry Factor	0.122

[1] These maximum fillet radii will be cleared by the bearing corners.

[2] These maximum fillet radii will be cleared by the bearing corners.

[3] Negative value indicates effective center inside cone backface.

[4] Based on 90 x 10^6 revolutions L_{10} life, for The Timken Company life calculation method. C_{90} and C_{a90} are radial and thrust values.

[5] Based on 1 x 10^6 revolutions L_{10} life, for the ISO life calculation method.

[6] Based on 90 x 10^6 revolutions L_{10} life, for The Timken Company life calculation method. C_{90} and C_{a90} are radial and thrust values for a single-row, $C_{90(2)}$ is the two-row radial value.

[7] These factors apply for both inch and metric calculations. Consult your Timken representative for instruction on use.

[8] These factors apply for both inch and metric calculations. Consult your Timken representative for instruction

on use.

[9] These factors apply for both inch and metric calculations. Consult your Timken representative for instruction on use.

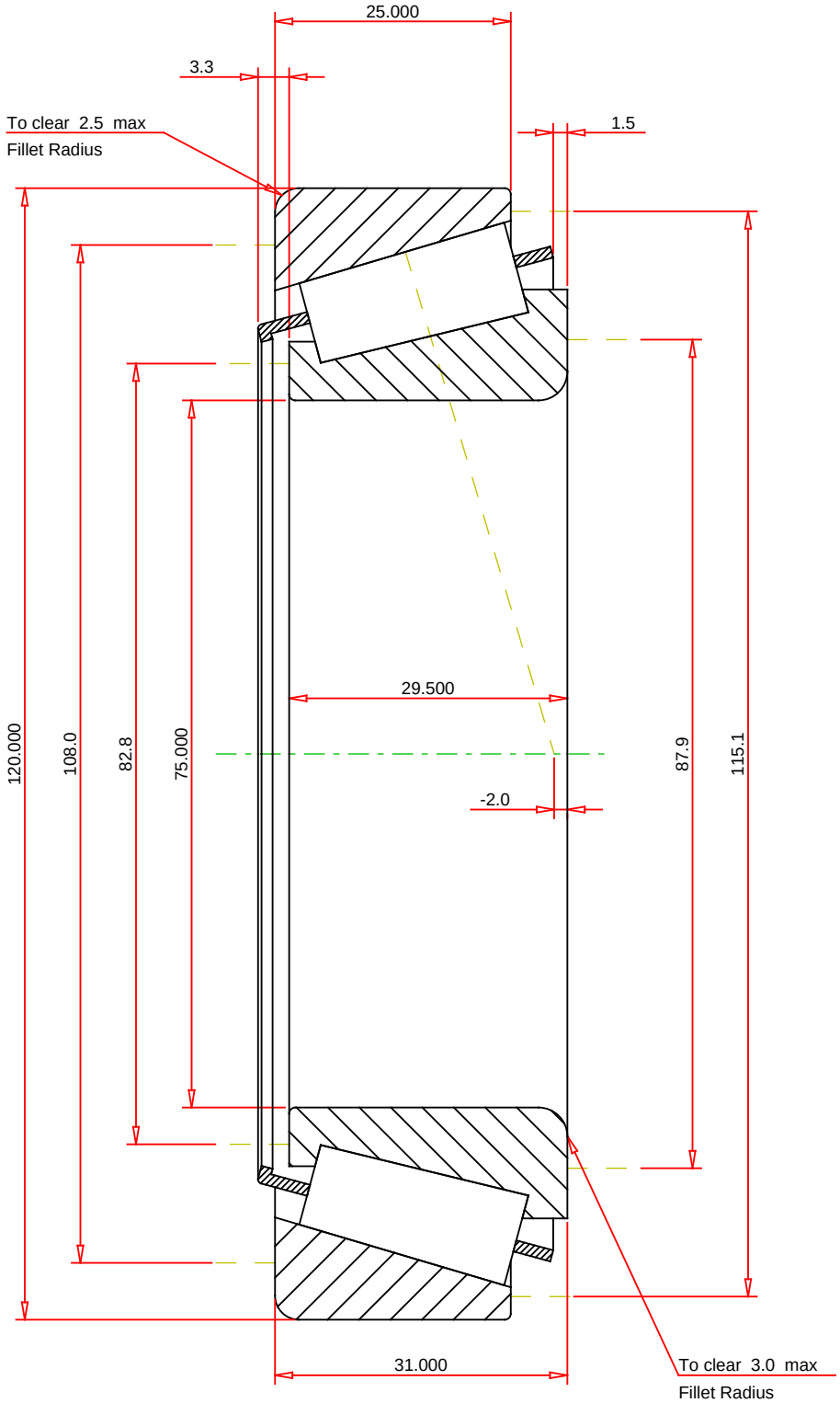

METRIC UNITS

ISO Factor - e	0.44	
ISO Factor - Y	1.35	
Bearing Weight	1.3	kg
Number of Rollers Per Row	23	
Effective Center Location	-2	mm

TIMKEN®

THE TIMKEN COMPANY
NORTH CANTON, OHIO USA

JM714249 - JM714210
TS BEARING ASSEMBLY

K Factor	1.31	
Dynamic Radial Rating - C90	41300	N
Dynamic Thrust Rating - Ca90	31400	N
Static Radial Rating - C0	229000	N
Dynamic Radial Rating - C1	159000	N

Every reasonable effort has been made to ensure the accuracy of the information contained in this writing, but no liability is accepted for errors, omissions or for any other reason.

FOR DISCUSSION ONLY