The Timken Company
4500 Mt Pleasant St. NW
N. Canton, OH 44720
Phone: (234) 262-3000
E-Mail: CustomerCAD@timken.com • **Web site:** www.timken.com

Part Number YA103RRB, Fafnir® Wide Inner Ring Setscrew Locking Ball Bearings



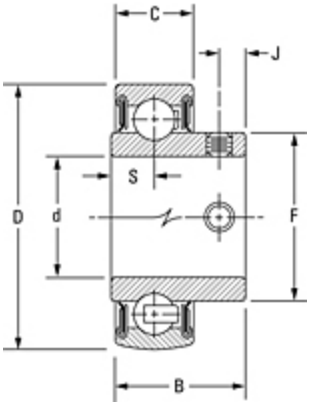

Specifications | Dimensions | Basic Load Ratings

Specifications

Shaft Size d	1 3/16 in 30.2 mm
Bore Type	Cylindrical bore
Bearing Type	Ball Bearing
Material	Bearing Steel
Lubrication Type	Non-Relubricatable
O.D. Type	Spherical OD
Series	Standard
Weight	0.50 lb 0.2 Kg
Sub Series	YA..RRB
Seal Type	Narrow Shroud

Dimensions

Outside Diameter D	2.441 in 62.000 mm
Inner Ring Width B	32.5 mm 1.280 in
Outside Ring Width C	18.000 mm 0.709 in
Radius r	0.6 mm 0.024 in
Center of Bearing from End S	9.65 mm 0.380 in
Dimension S1	22.85 mm 0.900 in
Set Screw Distance S2	7.87 mm 0.310 in
Set Screw Size	M8x1.25
Number of Set Screws	2
Angle between Set Screws	90 °

Basic Load Ratings

Static Load Rating	2530 lbf 11300 N
Dynamic Load Rating	4850 lbf 21600 N

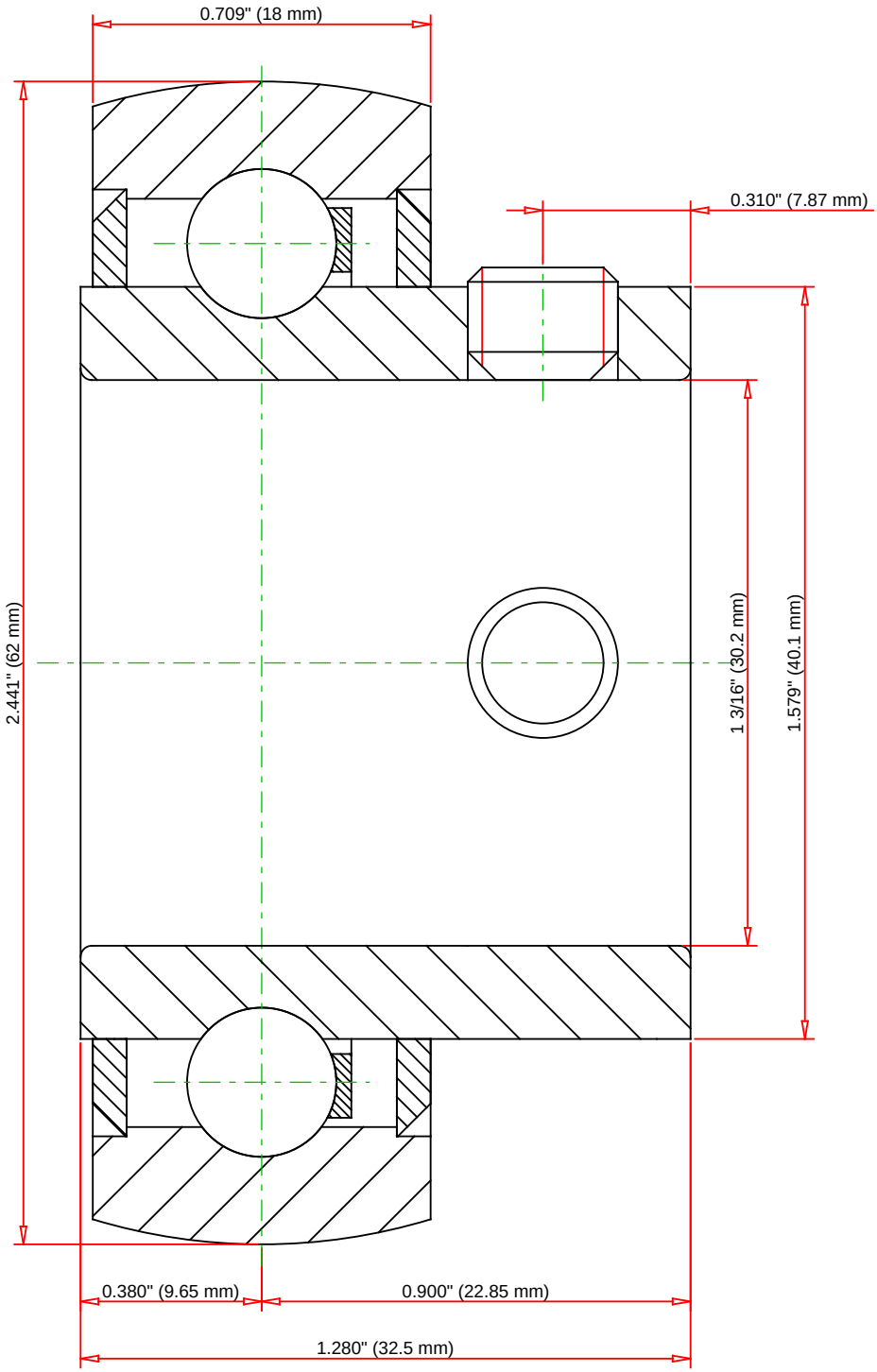

Weight	0.5 lb	0.2 kg

TIMKEN®

THE TIMKEN COMPANY
NORTH CANTON, OHIO USA

YA103RRB

Fafnir® Wide Inner Ring Setscrew Locking Ball Bearings

Basic Load Ratings - C_r	4900 lbf	21800 N
Load Ratings - C_{0r}	2500 lbf	11100 N

Every reasonable effort has been made to ensure the accuracy of the information contained in this writing, but no liability is accepted for errors, omissions or for any other reason.

FOR DISCUSSION ONLY