The Timken Company
4500 Mt Pleasant St. NW
N. Canton, OH 44720
Phone: (234) 262-3000
E-Mail: CustomerCAD@timken.com • **Web site:** www.timken.com

Timken Part Number JM822049 - JM822010, Tapered Roller Bearings - TS (Tapered Single) Metric

This is the most basic and most widely used type of tapered roller bearing. It consists of two main separable parts: the cone (inner ring) assembly and the cup (outer ring). It is typically mounted in opposing pairs on a shaft.



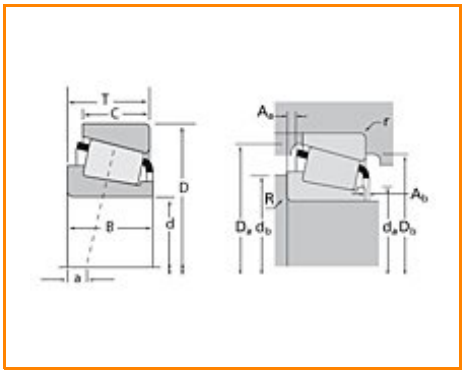

Specifications | Dimensions | Abutment and Fillet Dimensions | Basic Load Ratings | Factors

Specifications

Series	M822000
Cone Part Number	JM822049
Cup Part Number	JM822010
Design Units	METRIC
Bearing Weight	2.400 Kg 5.40 lb
Cage Type	Stamped Steel

Dimensions

d - Bore	110 mm 4.3307 in
D - Cup Outer Diameter	165.000 mm 6.4961 in
B - Cone Width	35.000 mm 1.3780 in
C - Cup Width	26.500 mm 1.0433 in
T - Bearing Width	35.000 mm 1.3780 in

Abutment and Fillet Dimensions

R - Cone Backface "To Clear" Radius[1]	3.050 mm 0.12 in
r - Cup Backface "To Clear" Radius[2]	2.54 mm 0.1 in
da - Cone Frontface Backing Diameter	119.13 mm 4.69 in
db - Cone Backface Backing Diameter	124.97 mm 4.92 in
Da - Cup Frontface Backing Diameter	160.00 mm 6.30 in
Db - Cup Backface Backing Diameter	149.10 mm 5.87 in
Ab - Cage-Cone Frontface Clearance	2.5 mm 0.1 in
Aa - Cage-Cone Backface Clearance	2.5 mm 0.1 in
a - Effective Center Location[3]	3 mm 0.12 in

Basic Load Ratings

C90 - Dynamic Radial Rating (90 million revolutions)[4]	58900 N 13200 lbf
C1 - Dynamic Radial Rating (1 million revolutions)[5]	227000 N 51100 lbf
C0 - Static Radial Rating	356000 N 80100 lbf
C_{a90} - Dynamic Thrust Rating (90 million revolutions)[6]	50100 N 11300 lbf

Factors

K - Factor[7]	1.18
e - ISO Factor[8]	0.5
Y - ISO Factor[9]	1.21
G1 - Heat Generation Factor (Roller-Raceway)	192
G2 - Heat Generation Factor (Rib-Roller End)	45.8
Cg - Geometry Factor	0.159

[1] These maximum fillet radii will be cleared by the bearing corners.

[2] These maximum fillet radii will be cleared by the bearing corners.

[3] Negative value indicates effective center inside cone backface.

[4] Based on 90 x 10^6 revolutions L_{10} life, for The Timken Company life calculation method. C_{90} and C_{a90} are radial and thrust values.

[5] Based on 1 x 10^6 revolutions L_{10} life, for the ISO life calculation method.

[6] Based on 90 x 10^6 revolutions L_{10} life, for The Timken Company life calculation method. C_{90} and C_{a90} are radial and thrust values for a single-row, $C_{90(2)}$ is the two-row radial value.

[7] These factors apply for both inch and metric calculations. Consult your Timken representative for instruction on use.

[8] These factors apply for both inch and metric calculations. Consult your Timken representative for instruction

on use.

[9] These factors apply for both inch and metric calculations. Consult your Timken representative for instruction on use.

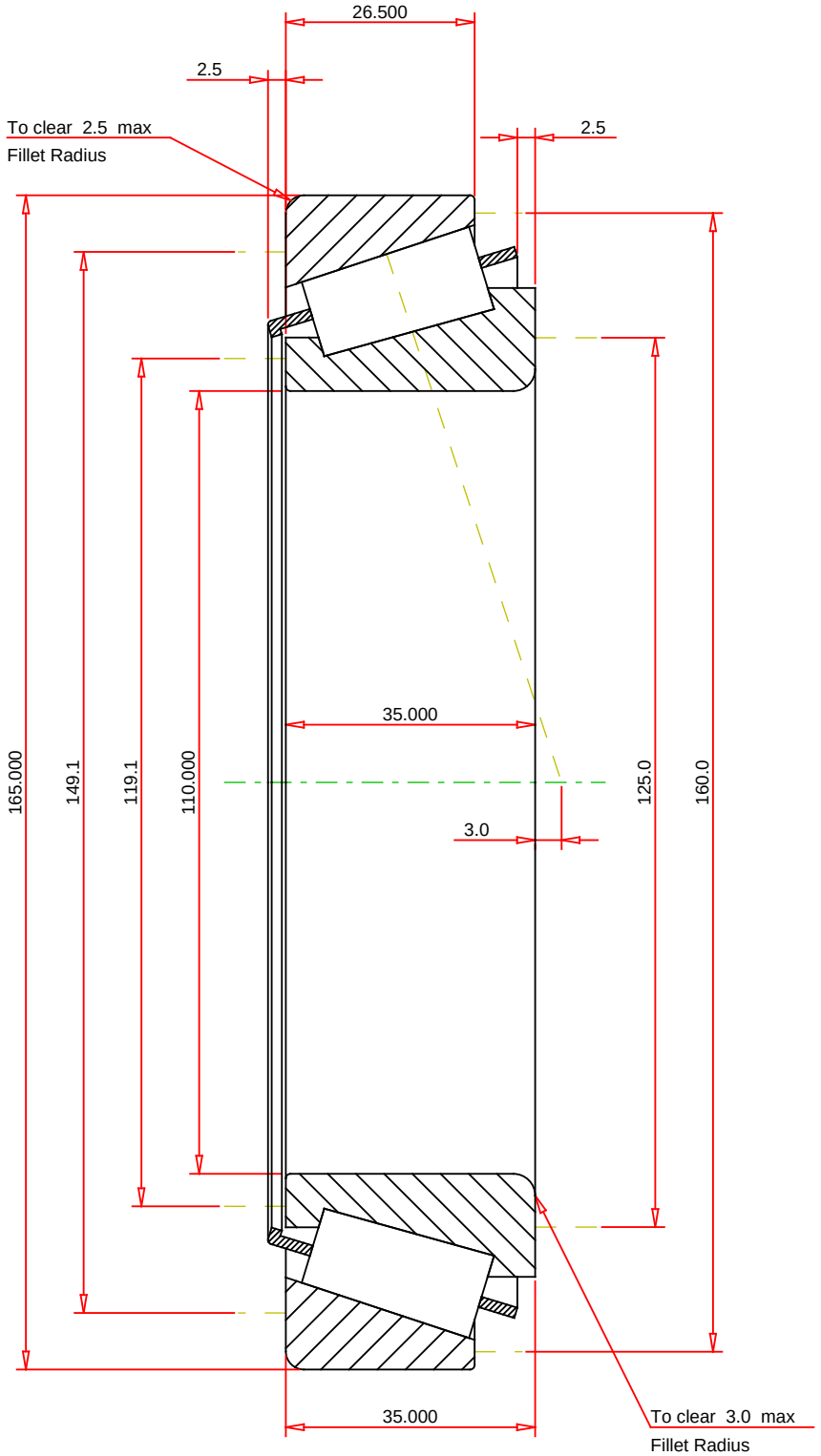

METRIC UNITS

ISO Factor - e	0.5	
ISO Factor - Y	1.21	
Bearing Weight	2.4	kg
Number of Rollers Per Row	27	
Effective Center Location	3	mm

TIMKEN®

THE TIMKEN COMPANY
NORTH CANTON, OHIO USA

JM822049 - JM822010
TS BEARING ASSEMBLY

K Factor	1.18	
Dynamic Radial Rating - C90	58900	N
Dynamic Thrust Rating - Ca90	50100	N
Static Radial Rating - C0	356000	N
Dynamic Radial Rating - C1	227000	N

Every reasonable effort has been made to ensure the accuracy of the information contained in this writing, but no liability is accepted for errors, omissions or for any other reason.

FOR DISCUSSION ONLY