The Timken Company
4500 Mt Pleasant St. NW
N. Canton, OH 44720
Phone: (234) 262-3000
E-Mail: CustomerCAD@timken.com • **Web site:** www.timken.com

Timken Part Number YCJT 25 SGT, Two-Bolt Flanged Units Setscrew Locking (Includes Industrial and Standard Series)



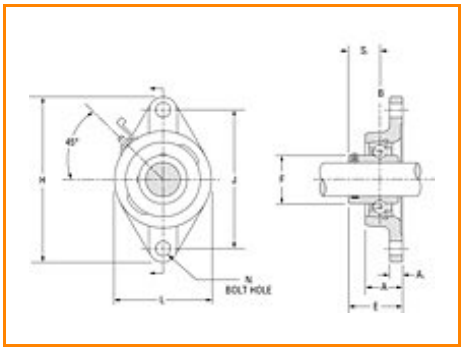

Specifications | Dimensions | Basic Load Ratings

Specifications

Bore Size d	0.984 in 25 mm
Bearing Number	GYE25KRRB SGT
Dimension E	1.575 in 40 mm
Inside Ring Outside Diameter	1.331 in 33.8 mm
Series	Industrial
Weight	1.366 lb 0.620 Kg
Seal Type	Shroud Seal

Dimensions

Total Length H	123.8 mm 4.874 in
Total Height L	69.9 mm 2.752 in
Total Width A	1.098 in 27.9 mm
Bolt Hole Spacing J	99.2 mm 3.906 in
Bolt Hole Size N	11.5 mm 0.453 in
Flange Thickness A1	12.7 mm 0.500 in
Center of Bearing from Housing End A2	19.4 mm 0.764 in
Inside Ring Width B	34.9 mm 1.374 in
Center of Bearing from Bearing End S	19.4 mm 0.764 in

Basic Load Ratings

Static Load Rating	1730 lbf 7700 N
Dynamic Load Rating	3550 lbf 15800 N

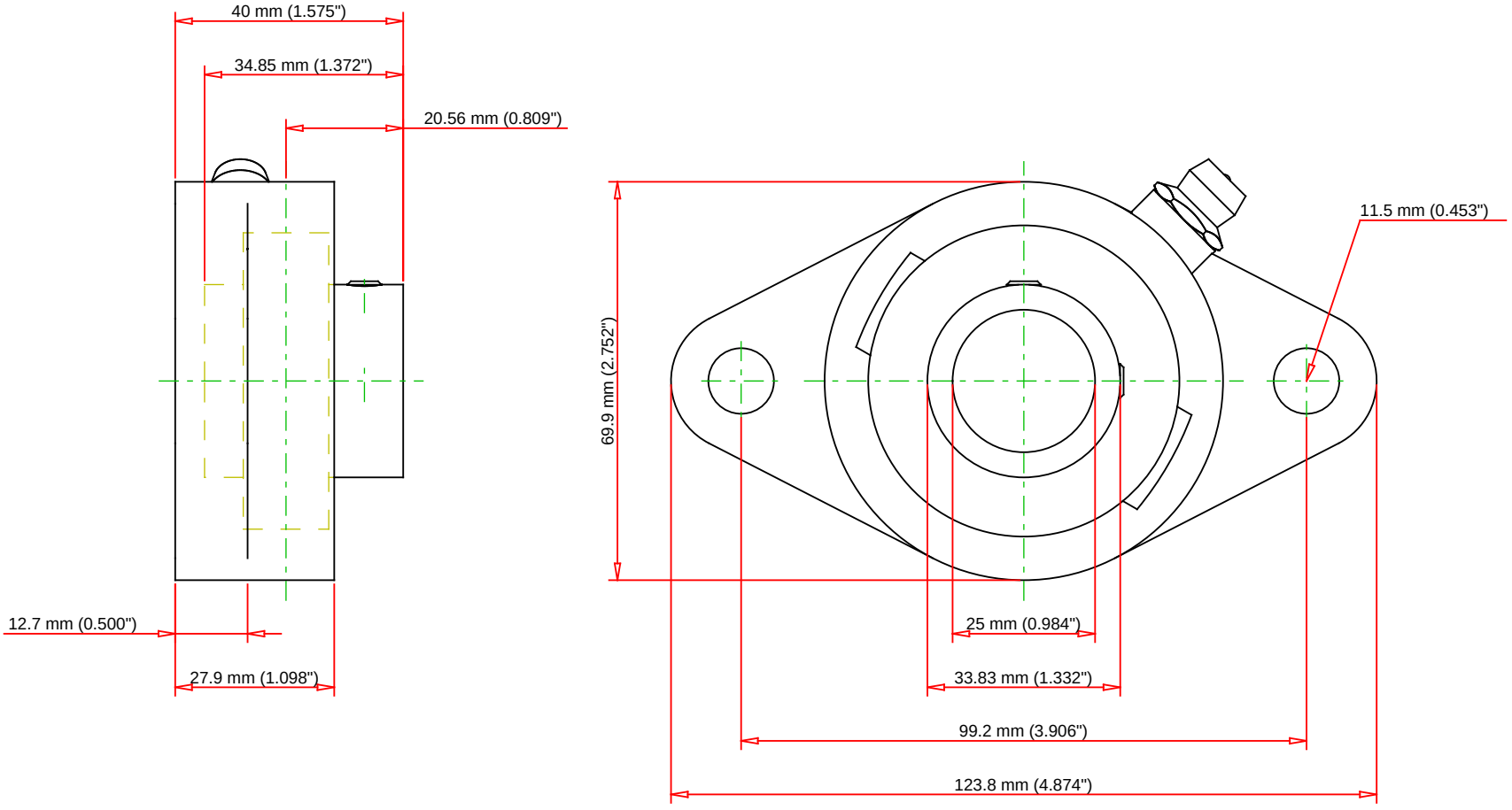

Bearing Number	GYE25KRRB SGT			
Load Ratings - C_r	3550	lbf	15800	N
Load Ratings - C_{0r}	1730	lbf	7700	N
Weight		lb		kg
Bolt Size	M6x1			

TIMKEN

THE TIMKEN COMPANY
NORTH CANTON, OHIO USA

YCJT 25 SGT

Two-Bolt Flanged Units Setscrew Locking
(Includes Industrial and Standard Series)

Every reasonable effort has been made to ensure the accuracy of the information contained in this writing, but no liability is accepted for errors, omissions or for any other reason.

FOR DISCUSSION ONLY