The Timken Company
4500 Mt Pleasant St. NW
N. Canton, OH 44720
Phone: (234) 262-3000
E-Mail: CustomerCAD@timken.com • **Web site:** www.timken.com

Timken Part Number AN 18-W 18, Inch Accessories - Locknut and Lockwasher

- The chart below shows dimensions for locknuts and lockwashers used in the mounting of straight bore bearings on shafts.
- Other dimensions and tolerances related to shaft configurations are also shown.
- Dimensions are presented according to bearing bore size and are applicable to bearings in the various series (e.g., 222 and 223 etc.).

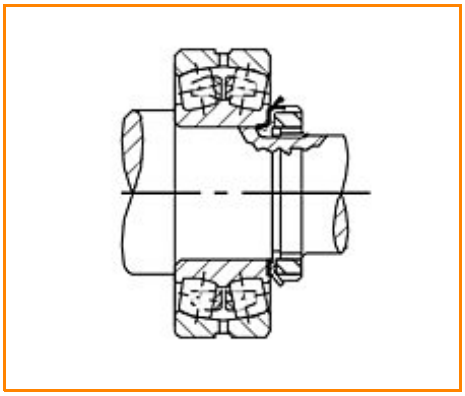

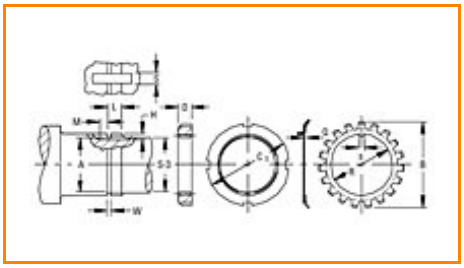

Specifications | Threads | Shaft | Locknut | Lockwasher

Specifications

Bearing Bore	90 mm
Threads No. per Inch	12
Locknut	AN 18
Lockwasher	W 18

Threads

Max. Major Diameter	89.59 mm 3.527 in

Min. Major Diameter	89.30 mm 3.5158 in
Max. Pitch Diameter	88.21 mm 3.4729 in
Min. Pitch Diameter	88.02 mm 3.4655 in
Minor Diameter	86.99 mm 3.4248 in

Shaft

Relief Diameter A	86.20 mm 3.3935 in
Diameter S-3	85.73 mm 3 3/8 in
W[1]	4.0 mm 5/32 in
L[2]	20.60 mm 0.8125 in
H[3]	4.0 mm 5/32 in
S[4]	9.0 mm 9.5 mm 0.353 in 3/8 in
M[5]	6.40 mm 1/4 in

Locknut

C_1	118.30 mm 4 21/32 in

D	17.70 mm 0.6980 in

Lockwasher

Q	2.40 mm 0.094 in
R	91.7 mm 3.612 in
B	125.40 mm 4 15/16 in

[1] Tolerance -0 to + 0.4 mm (-0 to +1/64 in)
[2] Tolerance -0 to + 0.4 mm (-0 to +1/64 in)
[3] Tolerance -0 to + 0.4 mm (-0 to +1/64 in)
[4] Tolerance -0 to + 0.4 mm (-0 to +1/64 in)
[5] Tolerance -0 to + 0.4 mm (-0 to +1/64 in)