The Timken Company
4500 Mt Pleasant St. NW
N. Canton, OH 44720
Phone: (234) 262-3000
E-Mail: CustomerCAD@timken.com • **Web site:** www.timken.com

Timken Part Number AN 16-W 16, Inch Accessories - Locknut and Lockwasher

- The chart below shows dimensions for locknuts and lockwashers used in the mounting of straight bore bearings on shafts.
- Other dimensions and tolerances related to shaft configurations are also shown.
- Dimensions are presented according to bearing bore size and are applicable to bearings in the various series (e.g., 222 and 223 etc.).

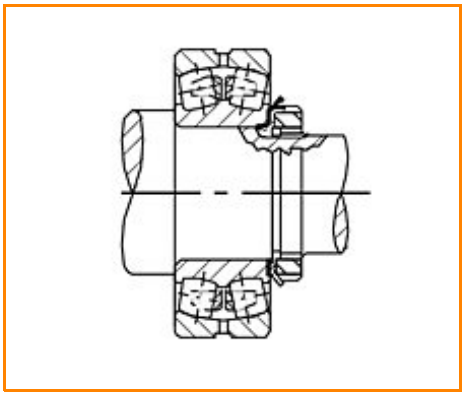

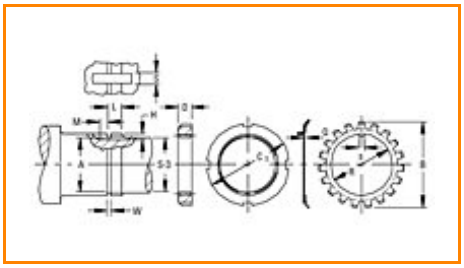

Specifications | Threads | Shaft | Locknut | Lockwasher

Specifications

Bearing Bore	80 mm
Threads No. per Inch	12
Locknut	AN 16
Lockwasher	W 16

Threads

Max. Major Diameter	79.68 mm 3.137 in

Min. Major Diameter	79.40 mm 3.1258 in
Max. Pitch Diameter	78.31 mm 3.0829 in
Min. Pitch Diameter	78.16 mm 3.0770 in
Minor Diameter	77.08 mm 3.0348 in

Shaft

Relief Diameter A	76.29 mm 3.0035 in
Diameter S-3	76.20 mm 3 in
W[1]	4.0 mm 5/32 in
L[2]	17.50 mm 0.6875 in
H[3]	3.2 mm 1/8 in
S[4]	9.0 mm 9.5 mm 0.353 in 3/8 in
M[5]	6.40 mm 1/4 in

Locknut

C_1	105.60 mm 4 5/32 in

D	15.30 mm 0.6040 in

Lockwasher

Q	1.80 mm 0.072 in
R	81.5 mm 3.207 in
B	111.10 mm 4 3/8 in

[1] Tolerance -0 to + 0.4 mm (-0 to +1/64 in)
[2] Tolerance -0 to + 0.4 mm (-0 to +1/64 in)
[3] Tolerance -0 to + 0.4 mm (-0 to +1/64 in)
[4] Tolerance -0 to + 0.4 mm (-0 to +1/64 in)
[5] Tolerance -0 to + 0.4 mm (-0 to +1/64 in)