The Timken Company
4500 Mt Pleasant St. NW
N. Canton, OH 44720
Phone: (234) 262-3000
E-Mail: CustomerCAD@timken.com • **Web site:** www.timken.com

Part Number YTU SGT 55, Fafnir® Take-Up Units Setscrew Locking



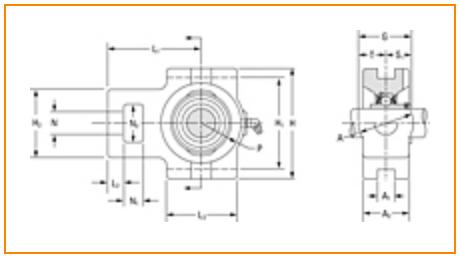

Specifications | Dimensions | Basic Load Ratings

Specifications

Shaft Size d	2.165 in 55 mm
Bearing Number	GYE55KRRB SGT
Dimension G	2.689 in 68.3 mm
Dimension P	2.720 in 69.1 mm
Dimension T	1.374 in 34.9 mm
Series	Industrial
Weight	13.76 lb 6.24 Kg
Seal Type	Shroud Seal
Housing Construction	Take-Up

Alternate Part Name	YTUSGT 55

Dimensions

Housing Width A	2.748 in 69.8 mm
Slot Width A1	27.00 mm 1.063 in
Socket Width A2	52.4 mm 2.063 in
Total Height H	149.2 mm 5.874 in
Pitch Height H1	129.4 mm
Height H2	101.6 mm
Total Length L	189.0 mm 7.441 in
Shaft Length L1	119.9 mm 4.72 in
Dimension L2	19.00 mm
Slot Length L3	101.60 mm 4.000 in
Adjustment Screw Bore N	34.9 mm 1.374 in
Opening Width N1	31.8 mm 1.252 in
Opening Height N2	63.5 mm 2.5 in
Inside Ring Width B	N/A
Center of Bearing from End S	34.9 mm 1.374 in

Basic Load Ratings

Static Load Rating	6570 lbf 29200 N
Dynamic Load Rating	10800 lbf 48100 N

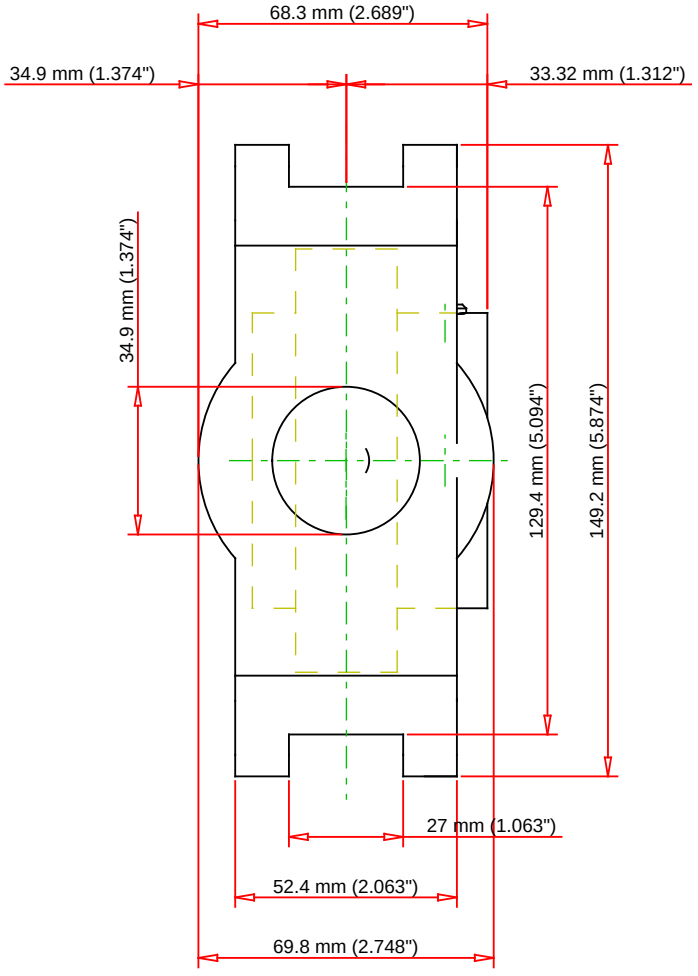

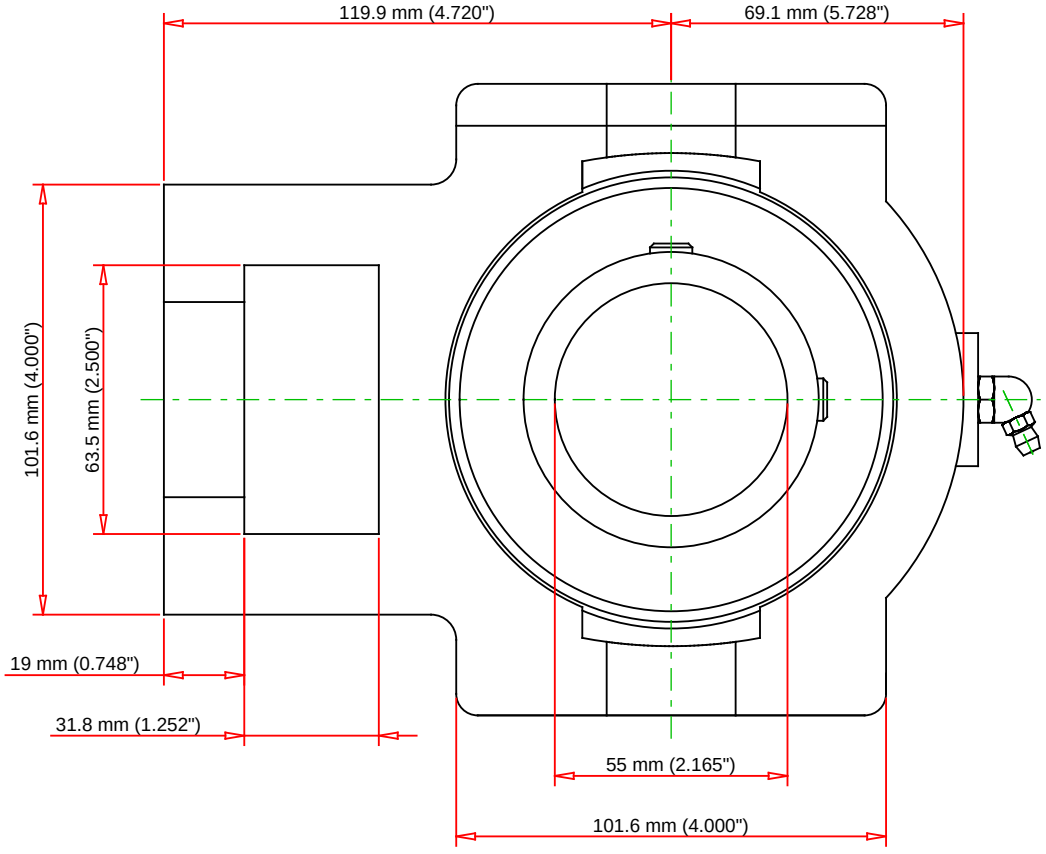

Bearing Number	GYE55KRRB SGT			
Load Ratings - C_r	10800	lbf	48000	N
Load Ratings - C_{0r}	6400	lbf	28500	N
Weight	24.3	lb	11	kg
Bolt Size	M10x1.5			

TIMKEN

THE TIMKEN COMPANY
NORTH CANTON, OHIO USA

YTU SGT 55

Fafnir® Take-Up Units Setscrew Locking

Every reasonable effort has been made to ensure the accuracy of the information contained in this writing, but no liability is accepted for errors, omissions or for any other reason.

FOR DISCUSSION ONLY