The Timken Company
4500 Mt Pleasant St. NW
N. Canton, OH 44720
Phone: (234) 262-3000
E-Mail: CustomerCAD@timken.com • **Web site:** www.timken.com

Timken Part Number 53150 - 53375, Tapered Roller Bearings - TS (Tapered Single) Imperial

This is the most basic and most widely used type of tapered roller bearing. It consists of two main separable parts: the cone (inner ring) assembly and the cup (outer ring). It is typically mounted in opposing pairs on a shaft.



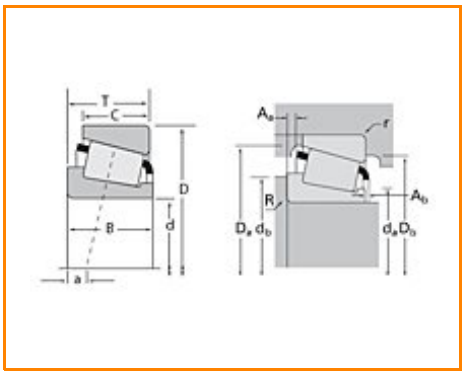

Specifications | Dimensions | Abutment and Fillet Dimensions | Basic Load Ratings | Factors

Specifications

Series	53000
Cone Part Number	53150
Cup Part Number	53375
Design Units	Imperial
Bearing Weight	1.000 Kg 2.30 lb
Cage Type	Stamped Steel

Dimensions

d - Bore	38.1 mm 1.5 in

D - Cup Outer Diameter	95.250 mm 3.7500 in
B - Cone Width	28.301 mm 1.1142 in
C - Cup Width	20.638 mm 0.8125 in
T - Bearing Width	30.958 mm 1.2188 in

Abutment and Fillet Dimensions

R - Cone Backface "To Clear" Radius[1]	1.520 mm 0.06 in
r - Cup Backface "To Clear" Radius[2]	0.76 mm 0.030 in
da - Cone Frontface Backing Diameter	52.58 mm 2.07 in
db - Cone Backface Backing Diameter	55.12 mm 2.17 in
Da - Cup Frontface Backing Diameter	89.90 mm 3.54 in
Db - Cup Backface Backing Diameter	81.03 mm 3.19 in
Ab - Cage-Cone Frontface Clearance	3 mm 0.12 in
Aa - Cage-Cone Backface Clearance	4.8 mm 0.19 in
a - Effective Center Location[3]	-0.3 mm -0.01 in

Basic Load Ratings

C90 - Dynamic Radial Rating (90 million revolutions)[4]	30800 N 6920 lbf
C1 - Dynamic Radial Rating (1 million revolutions)[5]	119000 N 26700 lbf
C0 - Static Radial Rating	104000 N 23400 lbf
C_{a90} - Dynamic Thrust Rating (90 million revolutions)[6]	39000 N 8760 lbf

Factors

K - Factor[7]	0.79
e - ISO Factor[8]	0.74
Y - ISO Factor[9]	0.81
G1 - Heat Generation Factor (Roller-Raceway)	26.7
G2 - Heat Generation Factor (Rib-Roller End)	9.63
Cg - Geometry Factor	0.093

[1] These maximum fillet radii will be cleared by the bearing corners.
[2] These maximum fillet radii will be cleared by the bearing corners.
[3] Negative value indicates effective center inside cone backface.
[4] Based on 90 x 10^6 revolutions L_{10} life, for The Timken Company life calculation method. C_{90} and C_{a90} are radial and thrust values.
[5] Based on 1 x 10^6 revolutions L_{10} life, for the ISO life calculation method.
[6] Based on 90 x 10^6 revolutions L_{10} life, for The Timken Company life calculation method. C_{90} and C_{a90} are radial and thrust values for a single-row, $C_{90(2)}$ is the two-row radial value.
[7] These factors apply for both inch and metric calculations. Consult your Timken representative for instruction on use.
[8] These factors apply for both inch and metric calculations. Consult your Timken representative for instruction on use.
[9] These factors apply for both inch and metric calculations. Consult your Timken representative for instruction on use.

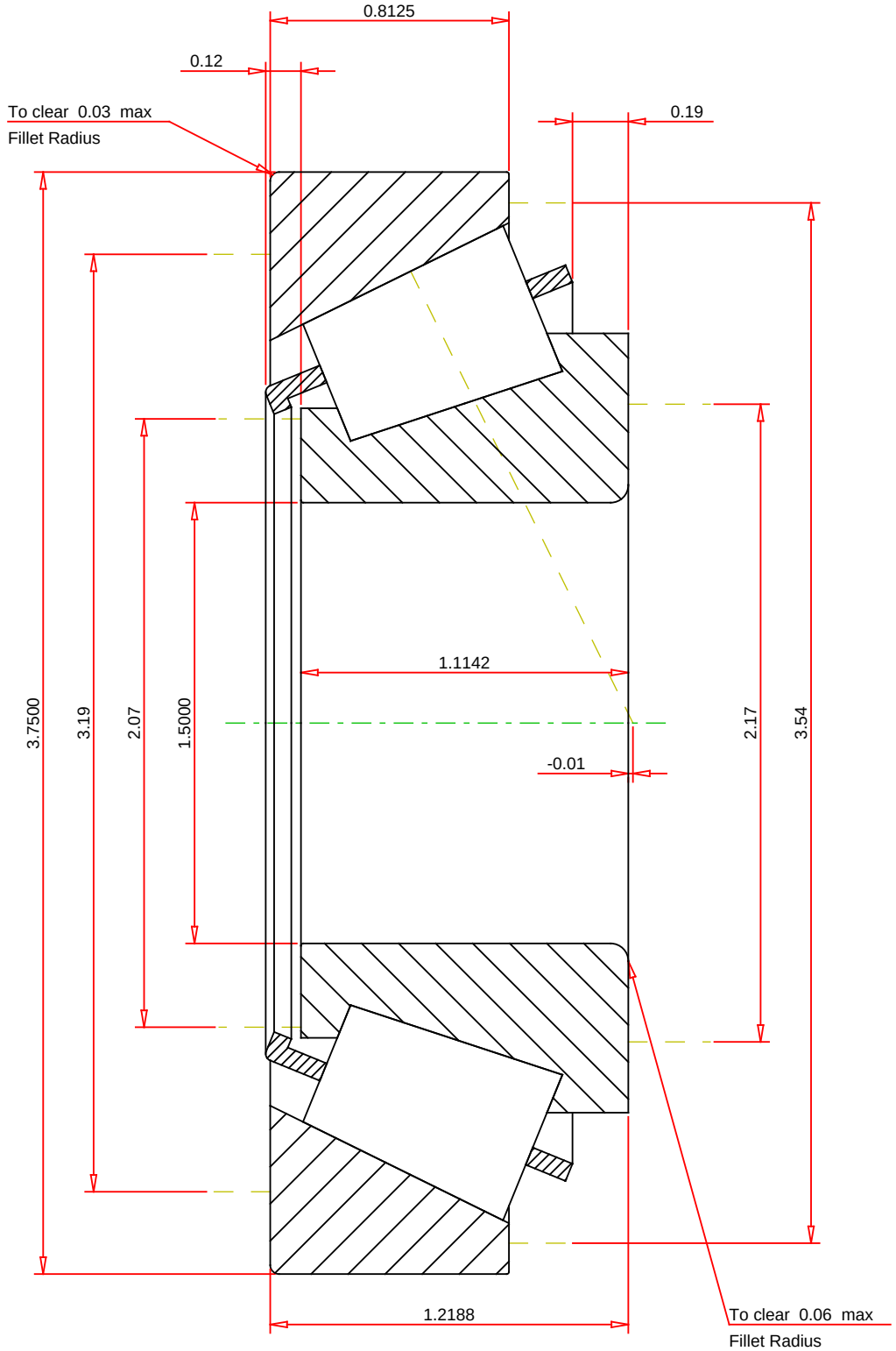

IMPERIAL UNITS

ISO Factor - e	0.74	
ISO Factor - Y	0.81	
Bearing Weight	2.3	lb
Number of Rollers Per Row	14	
Effective Center Location	-0.01	inch

TIMKEN

THE TIMKEN COMPANY
NORTH CANTON, OHIO USA

53150 - 53375
TS BEARING ASSEMBLY

K Factor	0.79	
Dynamic Radial Rating - C90	30800	lbf
Dynamic Thrust Rating - Ca90	39000	lbf
Static Radial Rating - C0	104000	lbf
Dynamic Radial Rating - C1	119000	lbf

Every reasonable effort has been made to ensure the accuracy of the information contained in this writing, but no liability is accepted for errors, omissions or for any other reason.

FOR DISCUSSION ONLY