The Timken Company
4500 Mt Pleasant St. NW
N. Canton, OH 44720
Phone: (234) 262-3000
E-Mail: CustomerCAD@timken.com • **Web site:** www.timken.com

Timken Part Number 26883 - 26820, Tapered Roller Bearings - TS (Tapered Single) Imperial

This is the most basic and most widely used type of tapered roller bearing. It consists of two main separable parts: the cone (inner ring) assembly and the cup (outer ring). It is typically mounted in opposing pairs on a shaft.



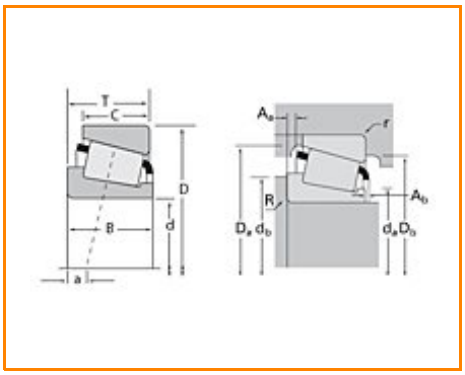

Specifications | Dimensions | Abutment and Fillet Dimensions | Basic Load Ratings | Factors

Specifications

Series	26800
Cone Part Number	26883
Cup Part Number	26820
Design Units	Imperial
Bearing Weight	0.600 Kg 1.40 lb
Cage Type	Stamped Steel

Dimensions

d - Bore	35.001 mm 1.3780 in

D - Cup Outer Diameter	80.167 mm 3.1562 in
B - Cone Width	25.400 mm 1.0000 in
C - Cup Width	20.638 mm 0.8125 in
T - Bearing Width	25.400 mm 1.0000 in

Abutment and Fillet Dimensions

R - Cone Backface "To Clear" Radius[1]	0.760 mm 0.03 in
r - Cup Backface "To Clear" Radius[2]	3.30 mm 0.130 in
da - Cone Frontface Backing Diameter	41.91 mm 1.65 in
db - Cone Backface Backing Diameter	42.42 mm 1.67 in
Da - Cup Frontface Backing Diameter	74.68 mm 2.94 in
Db - Cup Backface Backing Diameter	69.09 mm 2.72 in
Ab - Cage-Cone Frontface Clearance	1.8 mm 0.07 in
Aa - Cage-Cone Backface Clearance	1 mm 0.04 in
a - Effective Center Location[3]	-7.4 mm -0.29 in

Basic Load Ratings

C90 - Dynamic Radial Rating (90 million revolutions)[4]	23600 N 5310 lbf
C1 - Dynamic Radial Rating (1 million revolutions)[5]	91100 N 20500 lbf
C0 - Static Radial Rating	110000 N 24800 lbf
C_{a90} - Dynamic Thrust Rating (90 million revolutions)[6]	12900 N 2900 lbf

Factors

K - Factor[7]	1.83
e - ISO Factor[8]	0.32
Y - ISO Factor[9]	1.88
G1 - Heat Generation Factor (Roller-Raceway)	32.8
G2 - Heat Generation Factor (Rib-Roller End)	13.3
Cg - Geometry Factor	0.077

[1] These maximum fillet radii will be cleared by the bearing corners.
[2] These maximum fillet radii will be cleared by the bearing corners.
[3] Negative value indicates effective center inside cone backface.
[4] Based on 90 x 10^6 revolutions L_{10} life, for The Timken Company life calculation method. C_{90} and C_{a90} are radial and thrust values.
[5] Based on 1 x 10^6 revolutions L_{10} life, for the ISO life calculation method.
[6] Based on 90 x 10^6 revolutions L_{10} life, for The Timken Company life calculation method. C_{90} and C_{a90} are radial and thrust values for a single-row, $C_{90(2)}$ is the two-row radial value.
[7] These factors apply for both inch and metric calculations. Consult your Timken representative for instruction on use.
[8] These factors apply for both inch and metric calculations. Consult your Timken representative for instruction on use.
[9] These factors apply for both inch and metric calculations. Consult your Timken representative for instruction on use.

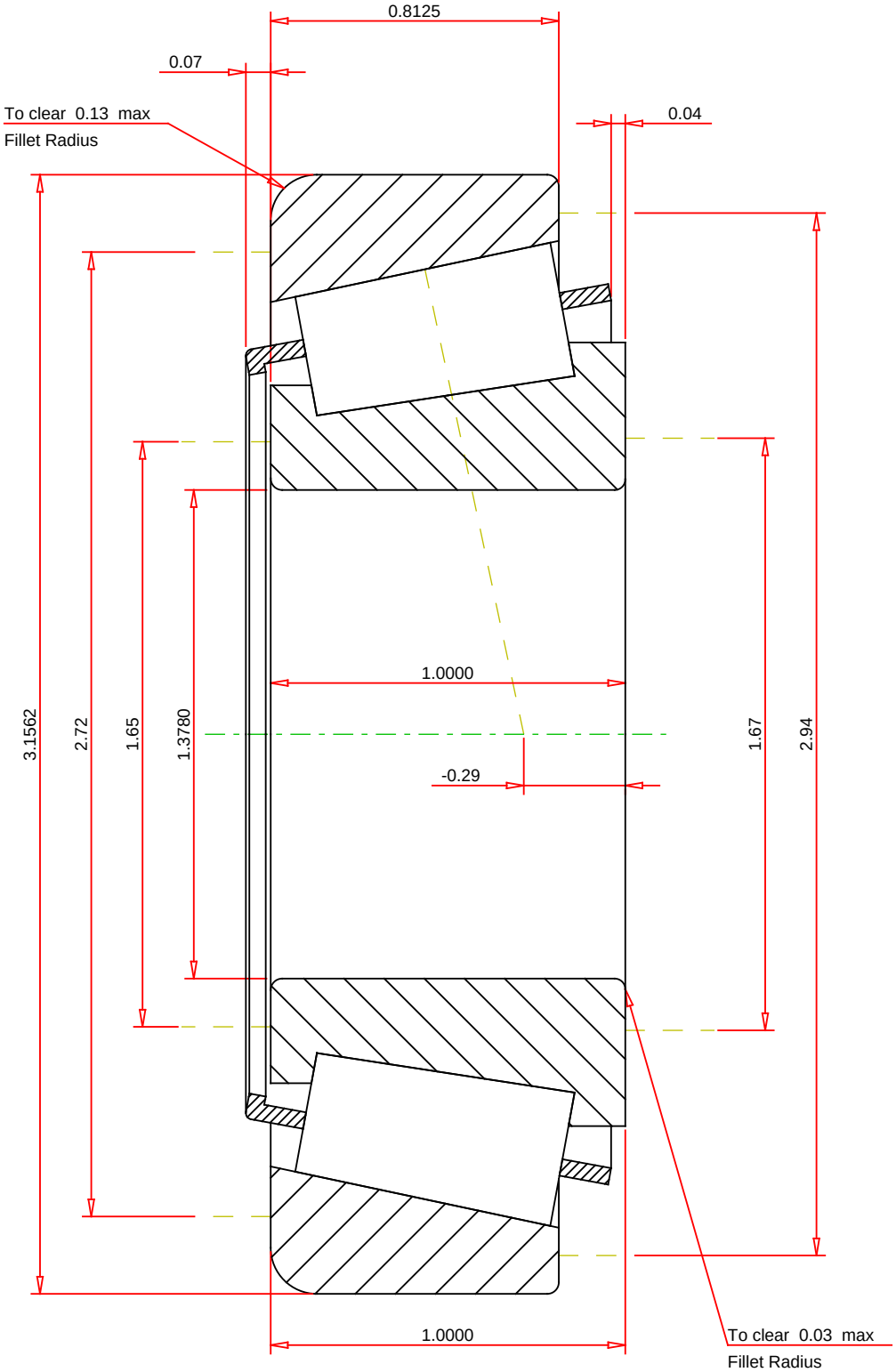

IMPERIAL UNITS

ISO Factor - e	0.32	
ISO Factor - Y	1.88	
Bearing Weight	1.4	lb
Number of Rollers Per Row	18	
Effective Center Location	-0.29	inch

TIMKEN

THE TIMKEN COMPANY
NORTH CANTON, OHIO USA

26883 - 26820
TS BEARING ASSEMBLY

K Factor	1.83	
Dynamic Radial Rating - C90	23600	lbf
Dynamic Thrust Rating - Ca90	12900	lbf
Static Radial Rating - C0	110000	lbf
Dynamic Radial Rating - C1	91100	lbf

Every reasonable effort has been made to ensure the accuracy of the information contained in this writing, but no liability is accepted for errors, omissions or for any other reason.

FOR DISCUSSION ONLY