The Timken Company
4500 Mt Pleasant St. NW
N. Canton, OH 44720
Phone: (234) 262-3000
E-Mail: CustomerCAD@timken.com • **Web site:** www.timken.com

Timken Part Number L570649 - L570610, Tapered Roller Bearings - TS (Tapered Single) Imperial

This is the most basic and most widely used type of tapered roller bearing. It consists of two main separable parts: the cone (inner ring) assembly and the cup (outer ring). It is typically mounted in opposing pairs on a shaft.



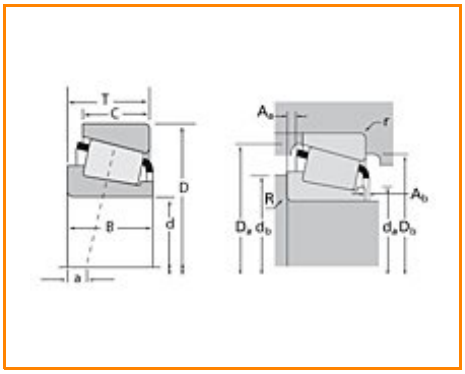

Specifications | Dimensions | Abutment and Fillet Dimensions | Basic Load Ratings | Factors

Specifications

Series	L570600
Cone Part Number	L570649
Cup Part Number	L570610
Design Units	Imperial
Bearing Weight	41.80 Kg 92.10 lb
Cage Type	Stamped Steel

Dimensions

d - Bore	457.200 mm 18.0000 in
D - Cup Outer Diameter	573.088 mm 22.5625 in
B - Cone Width	74.613 mm 2.9375 in
C - Cup Width	57.150 mm 2.2500 in
T - Bearing Width	74.613 mm 2.9375 in

Abutment and Fillet Dimensions

R - Cone Backface "To Clear" Radius[1]	6.35 mm 0.25 in
r - Cup Backface "To Clear" Radius[2]	6.35 mm 0.250 in
da - Cone Frontface Backing Diameter	474.98 mm 21.12 in
db - Cone Backface Backing Diameter	484.89 mm 19.09 in
Da - Cup Frontface Backing Diameter	560.58 mm 22.07 in
Db - Cup Backface Backing Diameter	543.05 mm 21.38 in
Ab - Cage-Cone Frontface Clearance	5.6 mm 0.22 in
Aa - Cage-Cone Backface Clearance	6.1 mm 0.24 in
a - Effective Center Location[3]	27.2 mm 1.07 in

Basic Load Ratings

C90 - Dynamic Radial Rating (90 million revolutions)[4]	319000 N 71700 lbf
C1 - Dynamic Radial Rating (1 million revolutions)[5]	1230000 N 277000 lbf
C0 - Static Radial Rating	3170000 N 713000 lbf
C_{a90} - Dynamic Thrust Rating (90 million revolutions)[6]	220000 N 49400 lbf

Factors

K - Factor[7]	1.45
e - ISO Factor[8]	0.40
Y - ISO Factor[9]	1.49
G1 - Heat Generation Factor (Roller-Raceway)	4970
G2 - Heat Generation Factor (Rib-Roller End)	560
Cg - Geometry Factor	0.232

[1] These maximum fillet radii will be cleared by the bearing corners.

[2] These maximum fillet radii will be cleared by the bearing corners.

[3] Negative value indicates effective center inside cone backface.

[4] Based on 90 x 10^6 revolutions L_{10} life, for The Timken Company life calculation method. C_{90} and C_{a90} are radial and thrust values.

[5] Based on 1 x 10^6 revolutions L_{10} life, for the ISO life calculation method.

[6] Based on 90 x 10^6 revolutions L_{10} life, for The Timken Company life calculation method. C_{90} and C_{a90} are radial and thrust values for a single-row, $C_{90(2)}$ is the two-row radial value.

[7] These factors apply for both inch and metric calculations. Consult your Timken representative for instruction on use.

[8] These factors apply for both inch and metric calculations. Consult your Timken representative for instruction

on use.

[9] These factors apply for both inch and metric calculations. Consult your Timken representative for instruction on use.

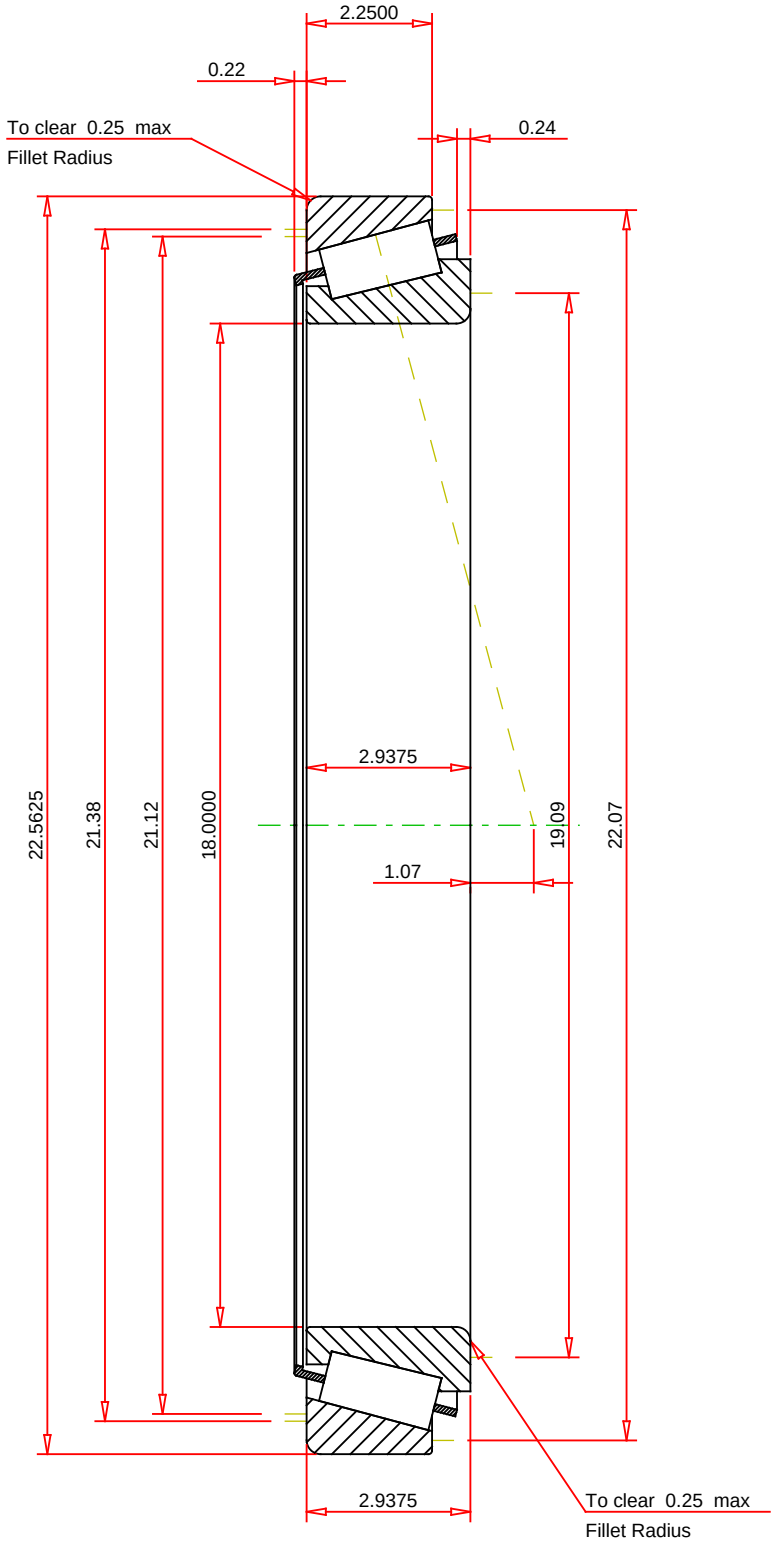

IMPERIAL UNITS

ISO Factor - e	0.4	
ISO Factor - Y	1.49	
Bearing Weight	92.1	lb
Number of Rollers Per Row	50	
Effective Center Location	1.07	inch

TIMKEN

THE TIMKEN COMPANY
NORTH CANTON, OHIO USA

L570649 - L570610
TS BEARING ASSEMBLY

K Factor	1.45	
Dynamic Radial Rating - C90	319000	lbf
Dynamic Thrust Rating - Ca90	220000	lbf
Static Radial Rating - C0	3170000	lbf
Dynamic Radial Rating - C1	1230000	lbf

Every reasonable effort has been made to ensure the accuracy of the information contained in this writing, but no liability is accepted for errors, omissions or for any other reason.

FOR DISCUSSION ONLY