The Timken Company
4500 Mt Pleasant St. NW
N. Canton, OH 44720
Phone: (234) 262-3000
E-Mail: CustomerCAD@timken.com • **Web site:** www.timken.com

Timken Part Number HM926747 - HM926710D, Tapered Roller Bearings - TDO (Tapered Double Outer) Imperial

The configuration of the TDO provides a wide effective bearing spread, making it ideal for applications in which overturning moments are a significant load component. TDO bearings can be used in fixed positions or allowed to float in the housing bore.



Specifications | Dimensions | Abutment and Fillet Dimensions | Basic Load Ratings | Factors

Specifications

Series	HM926700
Cone Part Number	HM926747
Cup Part Number	HM926710D
Design Units	Imperial
Bearing Weight	39.40 lb 17.874 Kg
Cage Type	Stamped Steel
Ab - Cage-Cone Frontface Clearance	0.29 in 7.4 mm

Dimensions

d - Bore	5 in 127 mm
D - Cup Outer Diameter	9.0000 in 228.600 mm
B - Cone Width	1.9460 in 49.428 mm
C - Double Cup Width	3.3125 in 84.138 mm
T - Bearing Width across Cones	4.5624 in 115.885 mm

Abutment and Fillet Dimensions

R - Cone Backface "To Clear" Radius[1]	0.14 in 3.600 mm
r - Cup Frontface "To Clear" Radius[2]	0.09 in 2.3 mm
db - Cone Backface Backing Diameter	6.14 in 156.00 mm
Da - Cup Frontface Backing Diameter	8.64 in 219.50 mm
Aa - Cage-Cone Backface Clearance	0.31 in 7.9 mm

Basic Load Ratings

C90 - Dynamic Radial Rating (One-Row, 90 million revolutions)[3]	34200 lbf 152000 N
C1 - Dynamic Radial Rating (Two-Row, 1 million revolutions)[4]	230000 lbf 1020000 N

C90(2) - Dynamic Radial Rating (Two-Row, 90 million revolutions)[5]	59500 lbf 265000 N
C_{a90} - Dynamic Thrust Rating (90 million revolutions)[6]	43100 lbf 192000 N

Factors

K - Factor[7]	0.79
e - ISO Factor[8]	1.94
Y1 - ISO Factor[9]	0.35 0.52
Y2 - ISO Factor[10]	0.52
G1 - Heat Generation Factor (Roller-Raceway)[11]	295
G2 - Heat Generation Factor (Rib-Roller End)	39
Cg - Geometry Factor[12]	0.142

[1] These maximum fillet radii will be cleared by the bearing corners.

[2] These maximum fillet radii will be cleared by the bearing corners.

[3] Based on 90 x 10^6 revolutions L_{10} life, for The Timken Company life calculation method. C_{90} and C_{a90} are radial and thrust values for a single-row, $C_{90(2)}$ is the two-row radial value.

[4] Based on 1 x 10^6 revolutions L_{10} life, for the ISO life calculation method.

[5] Based on 90 x 10^6 revolutions L_{10} life, for The Timken Company life calculation method. C_{90} and C_{a90} are radial and thrust values for a single-row, $C_{90(2)}$ is the two-row radial value.

[6] Based on 90 x 10^6 revolutions L_{10} life, for The Timken Company life calculation method. C_{90} and C_{a90} are radial and thrust values for a single-row, $C_{90(2)}$ is the two-row radial value.

[7] These factors apply for both inch and metric calculations. Consult your Timken representative for instruction on use.

[8] These factors apply for both inch and metric calculations. Consult your Timken representative for instruction on use.

[9] These factors apply for both inch and metric calculations. Consult your Timken representative for instruction

on use.

[10] These factors apply for both inch and metric calculations. Consult your Timken representative for instruction on use.

[11] These factors apply for both inch and metric calculations. Consult your Timken representative for instruction on use.

[12] Geometry constant for Lubrication Life Adjustment Factor a3l.

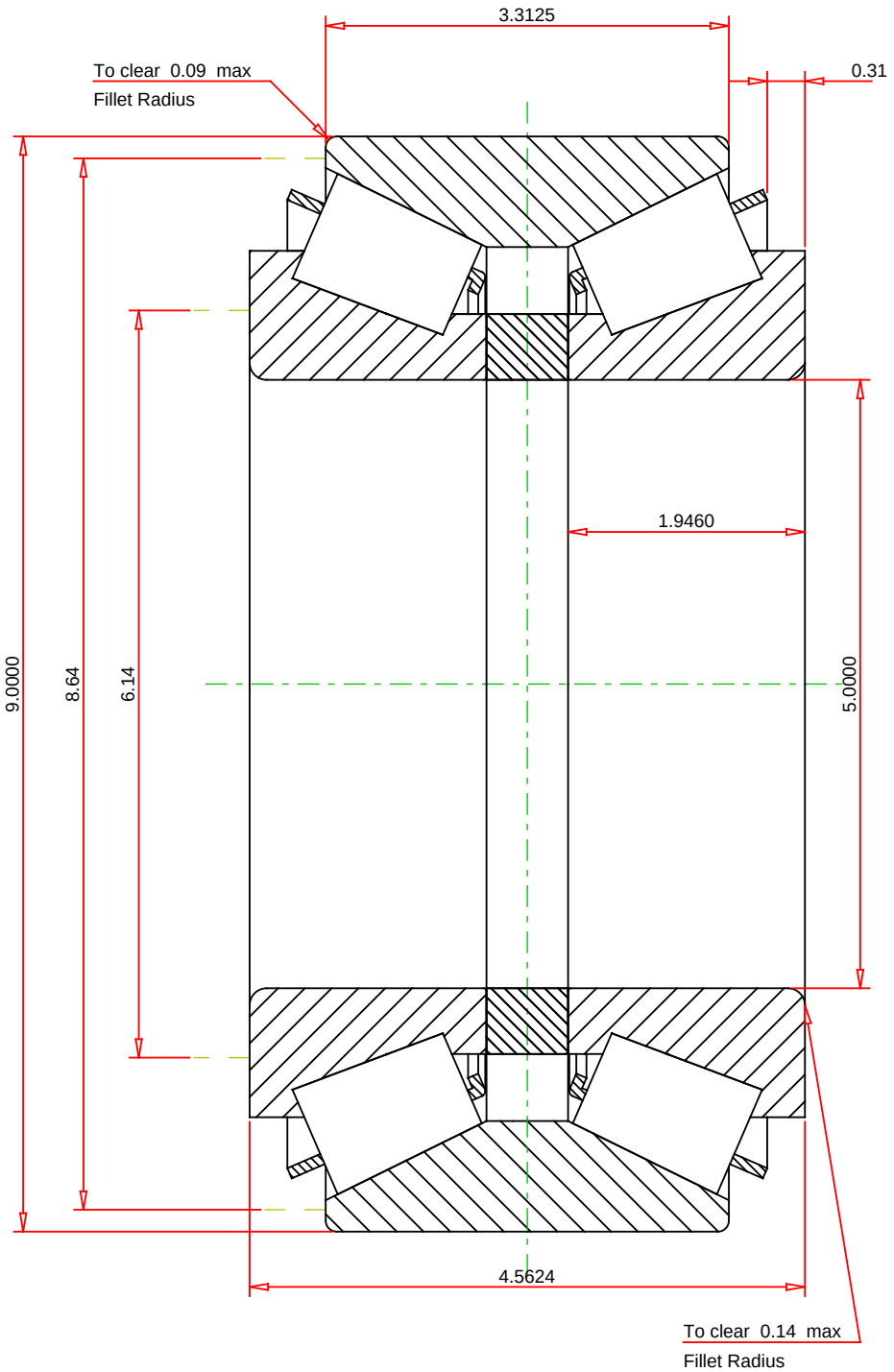

IMPERIAL UNITS

ISO Factor - e	1.94	
ISO Factor - Y1	0.35	
ISO Factor - Y2	0.52	
Bearing Weight	39.4	lb
Number of Rollers Per Row	20	

TIMKEN®

THE TIMKEN COMPANY
NORTH CANTON, OHIO USA

HM926747 - HM926710D
TDO BEARING ASSEMBLY

K Factor	0.79	
Dynamic Radial Rating - C90	34200	lbf
Dynamic Thrust Rating - Ca90	43100	lbf
Dynamic Radial Rating - C90(2)	59500	lbf
Radial Rating - C1	230000	lbf

Every reasonable effort has been made to ensure the accuracy of the information contained in this writing, but no liability is accepted for errors, omissions or for any other reason.

FOR DISCUSSION ONLY