The Timken Company
4500 Mt Pleasant St. NW
N. Canton, OH 44720
Phone: (234) 262-3000
E-Mail: CustomerCAD@timken.com • **Web site:** www.timken.com

Timken Part Number KM 26, Metric Locknut

No. KM00 - KM40 also available for 304 stainless steel.

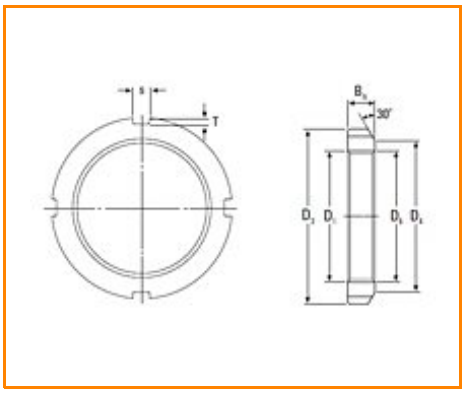

Specifications

Thread D_1[1]	M130x2.0
D_3	165 mm
D_4	149 mm
B_n	21 mm
s	12.0 mm
T	5.0 mm
D_6	131.0 mm
Lockwasher	MB 26
Assembly Weight	1.250 Kg

[1] Means metric thread and the digits are major diameter of thread and pitch.
Trmeans 30º; trapezoid thread and the digits are major diameter of thread and pitch.