The Timken Company
4500 Mt Pleasant St. NW
N. Canton, OH 44720
Phone: (234) 262-3000
E-Mail: CustomerCAD@timken.com • **Web site:** www.timken.com

Timken Part Number 365A - 362A, Tapered Roller Bearings - TS (Tapered Single) Imperial

This is the most basic and most widely used type of tapered roller bearing. It consists of two main separable parts: the cone (inner ring) assembly and the cup (outer ring). It is typically mounted in opposing pairs on a shaft.



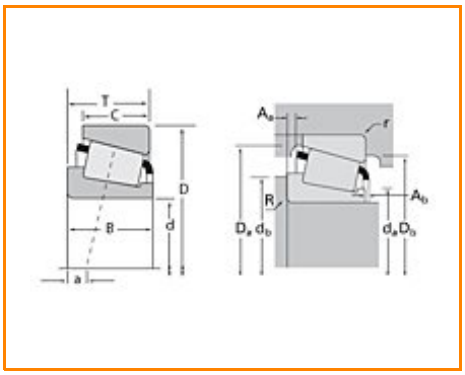

Specifications | Dimensions | Abutment and Fillet Dimensions | Basic Load Ratings | Factors

Specifications

Series	365
Cone Part Number	365A
Cup Part Number	362A
Design Units	Imperial
Bearing Weight	0.600 Kg 1.40 lb
Cage Type	Stamped Steel

Dimensions

d - Bore	41.275 mm 1.6250 in

D - Cup Outer Diameter	88.900 mm 3.5000 in
B - Cone Width	22.225 mm 0.8750 in
C - Cup Width	16.513 mm 0.6501 in
T - Bearing Width	20.638 mm 0.8125 in

Abutment and Fillet Dimensions

R - Cone Backface "To Clear" Radius[1]	3.560 mm 0.14 in
r - Cup Backface "To Clear" Radius[2]	1.27 mm 0.050 in
da - Cone Frontface Backing Diameter	48.51 mm 1.91 in
db - Cone Backface Backing Diameter	55.12 mm 2.17 in
Da - Cup Frontface Backing Diameter	84.10 mm 3.34 in
Db - Cup Backface Backing Diameter	81.03 mm 3.19 in
Ab - Cage-Cone Frontface Clearance	1.8 mm 0.07 in
Aa - Cage-Cone Backface Clearance	0 mm 0 in
a - Effective Center Location[3]	-4.30 mm -0.17 in

Basic Load Ratings

C90 - Dynamic Radial Rating (90 million revolutions)[4]	26400 N 5930 lbf
C1 - Dynamic Radial Rating (1 million revolutions)[5]	102000 N 22900 lbf
C0 - Static Radial Rating	95800 N 21500 lbf
C_{a90} - Dynamic Thrust Rating (90 million revolutions)[6]	14400 N 3250 lbf

Factors

K - Factor[7]	1.83
e - ISO Factor[8]	0.32
Y - ISO Factor[9]	1.88
G1 - Heat Generation Factor (Roller-Raceway)	33.8
G2 - Heat Generation Factor (Rib-Roller End)	14
Cg - Geometry Factor	0.0773

[1] These maximum fillet radii will be cleared by the bearing corners.
[2] These maximum fillet radii will be cleared by the bearing corners.
[3] Negative value indicates effective center inside cone backface.
[4] Based on 90 x 10^6 revolutions L_{10} life, for The Timken Company life calculation method. C_{90} and C_{a90} are radial and thrust values.
[5] Based on 1 x 10^6 revolutions L_{10} life, for the ISO life calculation method.
[6] Based on 90 x 10^6 revolutions L_{10} life, for The Timken Company life calculation method. C_{90} and C_{a90} are radial and thrust values for a single-row, $C_{90(2)}$ is the two-row radial value.
[7] These factors apply for both inch and metric calculations. Consult your Timken representative for instruction on use.
[8] These factors apply for both inch and metric calculations. Consult your Timken representative for instruction on use.
[9] These factors apply for both inch and metric calculations. Consult your Timken representative for instruction on use.

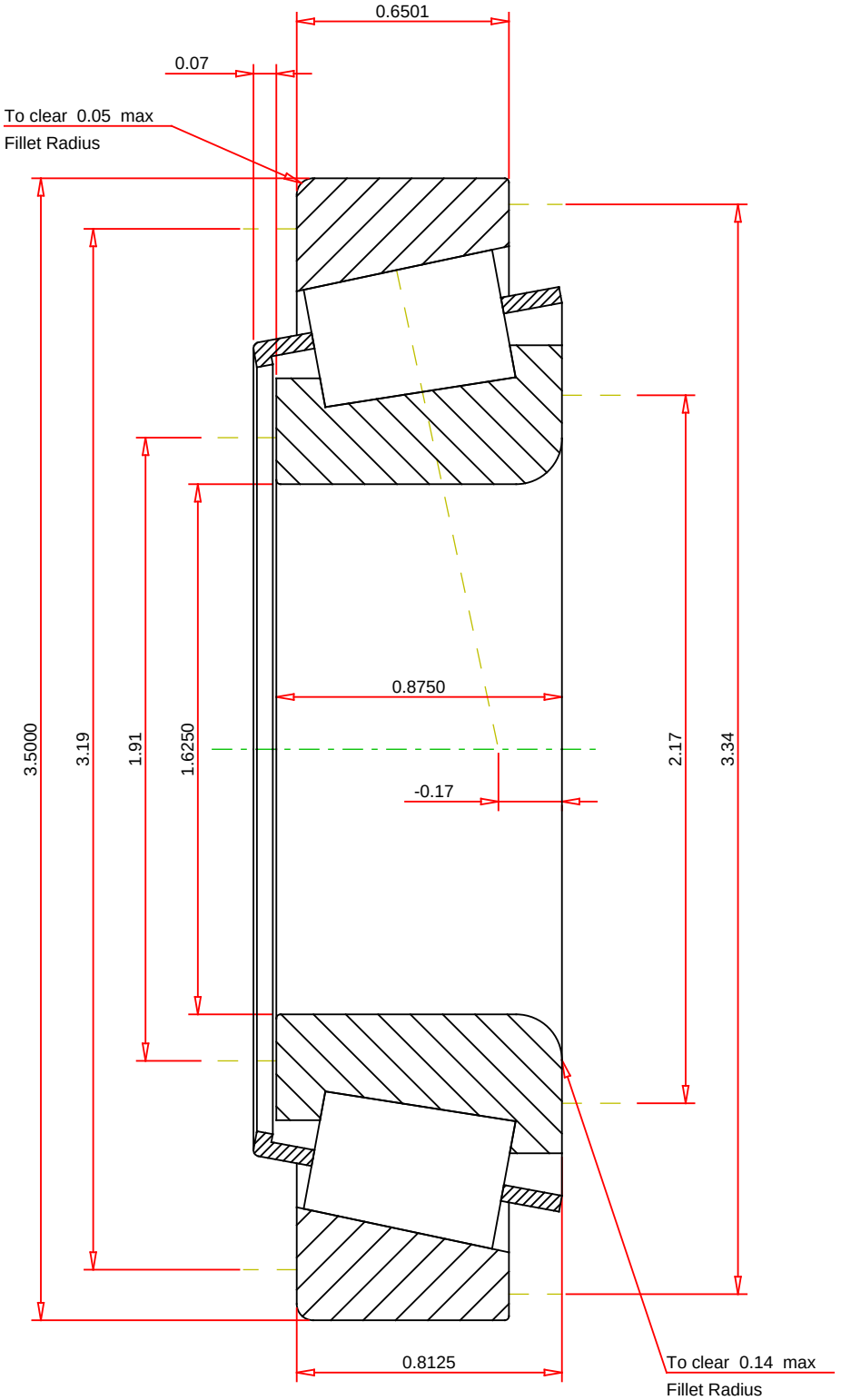

IMPERIAL UNITS

ISO Factor - e	0.32	
ISO Factor - Y	1.88	
Bearing Weight	1.4	lb
Number of Rollers Per Row	17	
Effective Center Location	-0.17	inch

TIMKEN®

THE TIMKEN COMPANY
NORTH CANTON, OHIO USA

365A - 362A
TS BEARING ASSEMBLY

K Factor	1.83	
Dynamic Radial Rating - C90	26400	lbf
Dynamic Thrust Rating - Ca90	14400	lbf
Static Radial Rating - C0	95800	lbf
Dynamic Radial Rating - C1	102000	lbf

Every reasonable effort has been made to ensure the accuracy of the information contained in this writing, but no liability is accepted for errors, omissions or for any other reason.

FOR DISCUSSION ONLY