The Timken Company
4500 Mt Pleasant St. NW
N. Canton, OH 44720
Phone: (234) 262-3000
E-Mail: CustomerCAD@timken.com • **Web site:** www.timken.com

Timken Part Number GYE50KRRB SGT, Fafnir® Setscrew Locking Ball Bearings



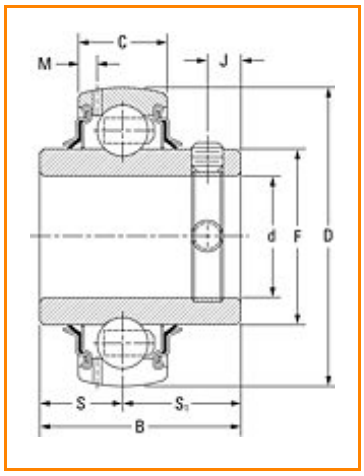

Specifications | Dimensions | Basic Load Ratings

Specifications

Bore Size d	1.969 in 50 mm
Bore Type	Cylindrical bore
Bearing Type	Ball Bearing
Seal Type	Shroud Seal
Material	Bearing Steel
Lubrication Type	Relubricatable
O.D. Type	Spherical OD
Dimension M	0.185 in 4.7 mm
Series	Industrial

Weight	0.500 lb 0.200 Kg
Sub Series	GYE..KRRB SGT

Dimensions

Outside Diameter D	3.543 in 90.000 mm
Inside Ring Width B	51.59 mm 2.031 in
Outside Ring Width C	22.000 mm 0.866 in
Radius r	0.6 mm 0.024 in
Center of Bearing from End S	19.05 mm 0.750 in
Dimension S1	32.54 mm 1.281 in
Set Screw Distance S2	10 mm 0.394 in
Set Screw Size	M10X1.5
Number of Set Screws	2
Angle between Set Screws	90 º

Basic Load Ratings

Static Load Rating	5100 lbf 22700 N
Dynamic Load Rating	8800 lbf 39000 N

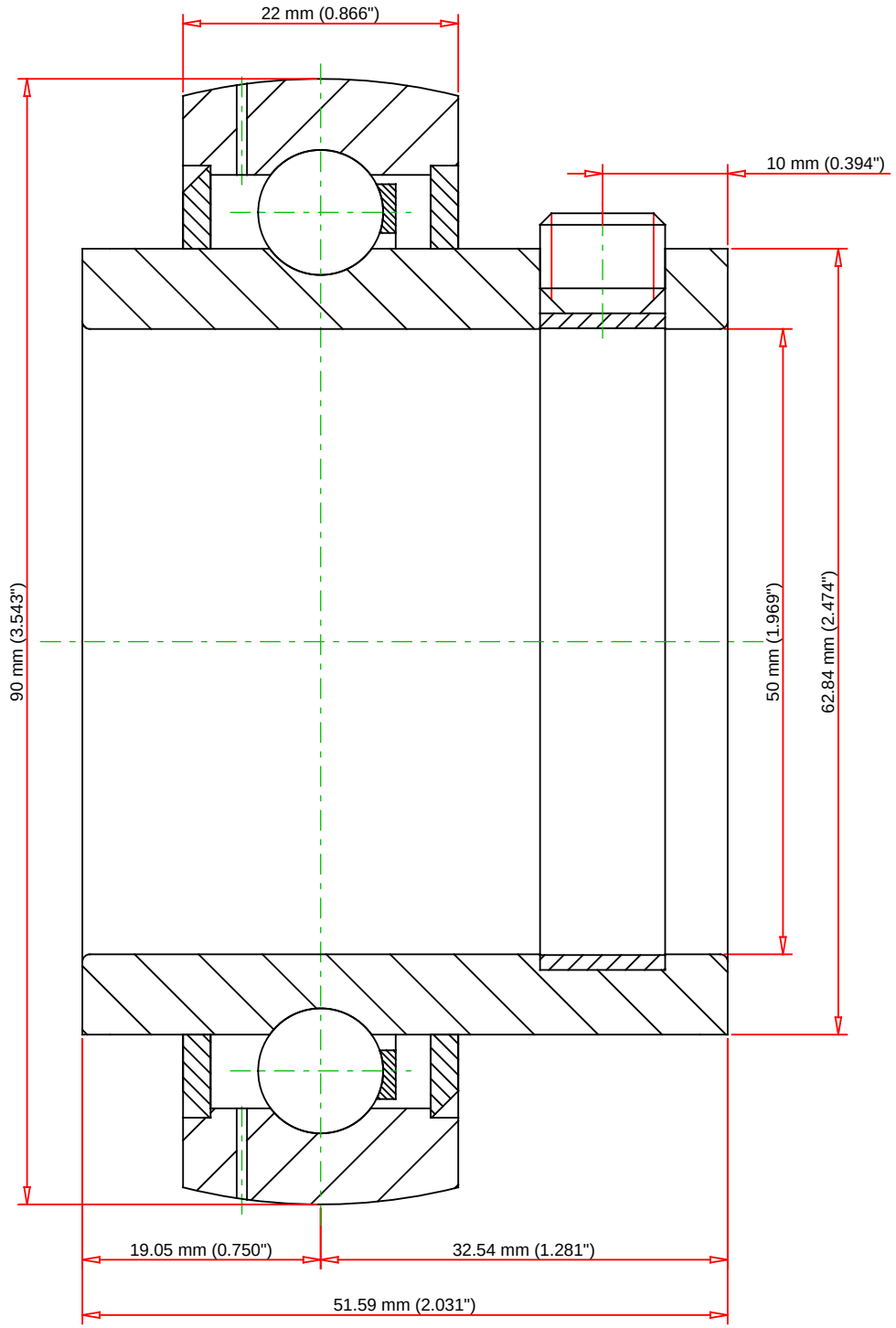

Weight	0.5 lb	0.2 kg

TIMKEN®

THE TIMKEN COMPANY
NORTH CANTON, OHIO USA

GYE50KRRB SGT

Fafnir® Setscrew Locking Ball Bearings

Basic Load Ratings - C_r	8800 lbf	39000 N
Load Ratings - C_{0r}	5100 lbf	22700 N

Every reasonable effort has been made to ensure the accuracy of the information contained in this writing, but no liability is accepted for errors, omissions or for any other reason.

FOR DISCUSSION ONLY