The Timken Company
4500 Mt Pleasant St. NW
N. Canton, OH 44720
Phone: (234) 262-3000
E-Mail: CustomerCAD@timken.com • **Web site:** www.timken.com

Timken Part Number 45291 - 45220, Tapered Roller Bearings - TS (Tapered Single) Imperial

This is the most basic and most widely used type of tapered roller bearing. It consists of two main separable parts: the cone (inner ring) assembly and the cup (outer ring). It is typically mounted in opposing pairs on a shaft.



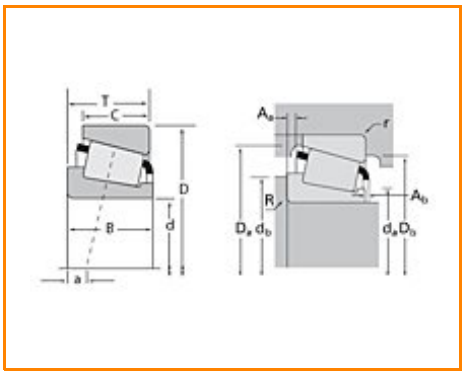

Specifications | Dimensions | Abutment and Fillet Dimensions | Basic Load Ratings | Factors

Specifications

Series	45200
Cone Part Number	45291
Cup Part Number	45220
Design Units	Imperial
Bearing Weight	1.100 Kg 2.30 lb
Cage Type	Stamped Steel

Dimensions

d - Bore	57.150 mm 2.2500 in

D - Cup Outer Diameter	104.775 mm 4.1250 in
B - Cone Width	30.958 mm 1.2188 in
C - Cup Width	23.813 mm 0.9375 in
T - Bearing Width	30.163 mm 1.1875 in

Abutment and Fillet Dimensions

R - Cone Backface "To Clear" Radius[1]	6.35 mm 0.25 in
r - Cup Backface "To Clear" Radius[2]	3.30 mm 0.130 in
da - Cone Frontface Backing Diameter	65.02 mm 2.56 in
db - Cone Backface Backing Diameter	75.95 mm 2.99 in
Da - Cup Frontface Backing Diameter	99.10 mm 3.94 in
Db - Cup Backface Backing Diameter	92.96 mm 3.66 in
Ab - Cage-Cone Frontface Clearance	2.5 mm 0.1 in
Aa - Cage-Cone Backface Clearance	1.8 mm 0.07 in
a - Effective Center Location[3]	-8.1 mm -0.32 in

Basic Load Ratings

C90 - Dynamic Radial Rating (90 million revolutions)[4]	39700 N 8930 lbf
C1 - Dynamic Radial Rating (1 million revolutions)[5]	153000 N 34500 lbf
C0 - Static Radial Rating	189000 N 42600 lbf
C_{a90} - Dynamic Thrust Rating (90 million revolutions)[6]	22600 N 5090 lbf

Factors

K - Factor[7]	1.76
e - ISO Factor[8]	0.33
Y - ISO Factor[9]	1.8
G1 - Heat Generation Factor (Roller-Raceway)	63.5
G2 - Heat Generation Factor (Rib-Roller End)	16.9
Cg - Geometry Factor	0.0971

[1] These maximum fillet radii will be cleared by the bearing corners.
[2] These maximum fillet radii will be cleared by the bearing corners.
[3] Negative value indicates effective center inside cone backface.
[4] Based on 90 x 10^6 revolutions L_{10} life, for The Timken Company life calculation method. C_{90} and C_{a90} are radial and thrust values.
[5] Based on 1 x 10^6 revolutions L_{10} life, for the ISO life calculation method.
[6] Based on 90 x 10^6 revolutions L_{10} life, for The Timken Company life calculation method. C_{90} and C_{a90} are radial and thrust values for a single-row, $C_{90(2)}$ is the two-row radial value.
[7] These factors apply for both inch and metric calculations. Consult your Timken representative for instruction on use.
[8] These factors apply for both inch and metric calculations. Consult your Timken representative for instruction on use.
[9] These factors apply for both inch and metric calculations. Consult your Timken representative for instruction on use.

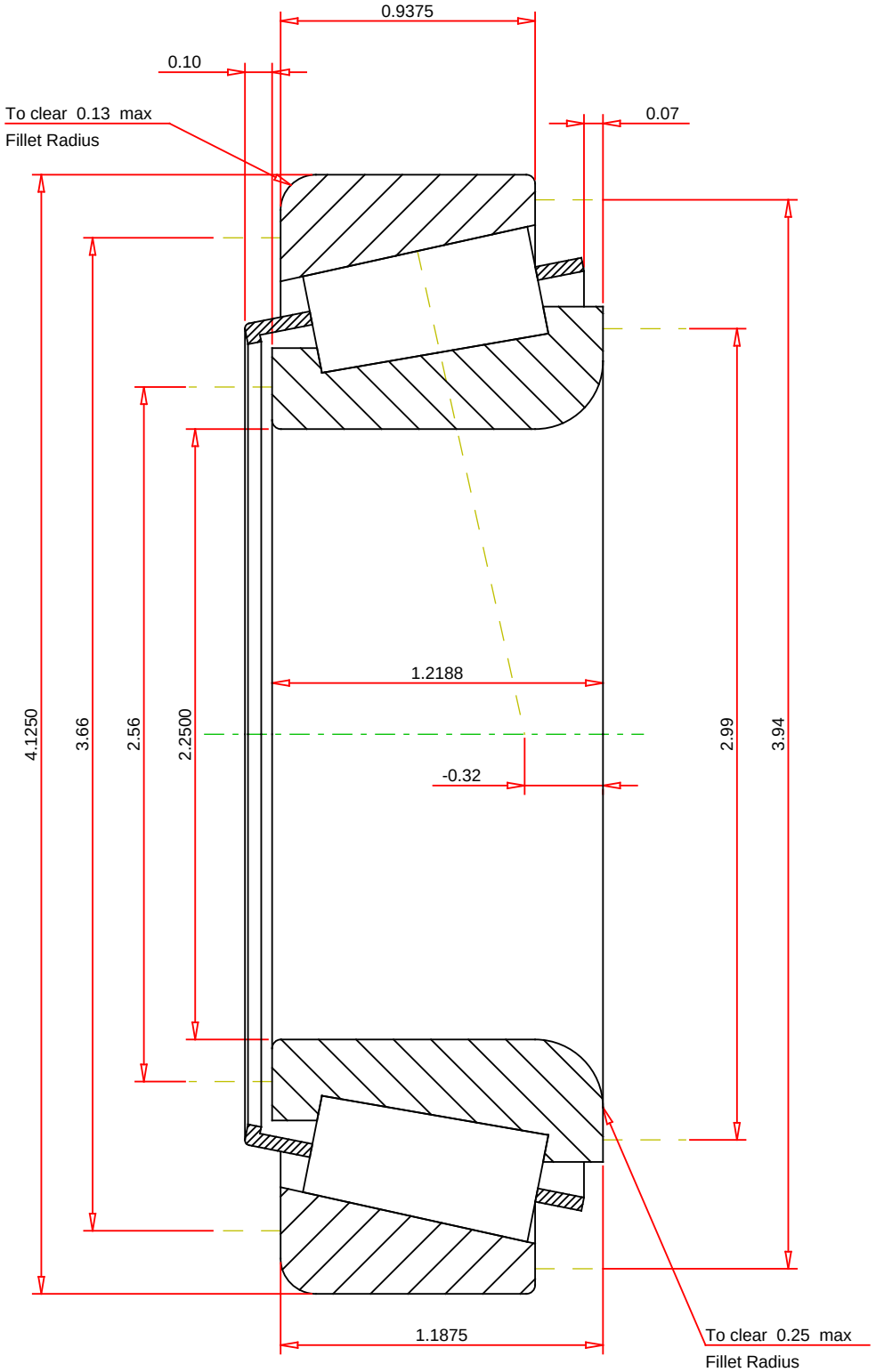

IMPERIAL UNITS

ISO Factor - e	0.33	
ISO Factor - Y	1.8	
Bearing Weight	2.3	lb
Number of Rollers Per Row	18	
Effective Center Location	-0.32	inch

TIMKEN®

THE TIMKEN COMPANY
NORTH CANTON, OHIO USA

45291 - 45220
TS BEARING ASSEMBLY

K Factor	1.76	
Dynamic Radial Rating - C90	39700	lbf
Dynamic Thrust Rating - Ca90	22600	lbf
Static Radial Rating - C0	189000	lbf
Dynamic Radial Rating - C1	153000	lbf

Every reasonable effort has been made to ensure the accuracy of the information contained in this writing, but no liability is accepted for errors, omissions or for any other reason.

FOR DISCUSSION ONLY