The Timken Company
4500 Mt Pleasant St. NW
N. Canton, OH 44720
Phone: (234) 262-3000
E-Mail: CustomerCAD@timken.com • **Web site:** www.timken.com

Timken Part Number 2783 - 2729X, Tapered Roller Bearings - TS (Tapered Single) Imperial

This is the most basic and most widely used type of tapered roller bearing. It consists of two main separable parts: the cone (inner ring) assembly and the cup (outer ring). It is typically mounted in opposing pairs on a shaft.



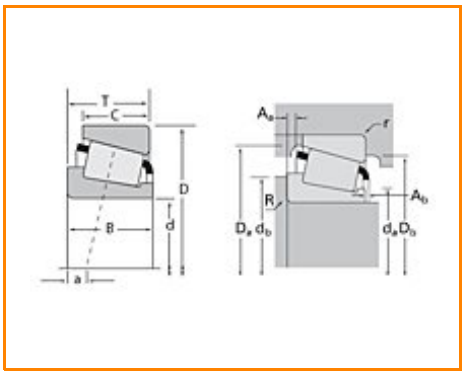

Specifications | Dimensions | Abutment and Fillet Dimensions | Basic Load Ratings | Factors

Specifications

Series	2700
Cone Part Number	2783
Cup Part Number	2729X
Design Units	Imperial
Bearing Weight	0.600 Kg 1.30 lb
Cage Type	Stamped Steel

Dimensions

d - Bore	31.750 mm 1.2500 in

D - Cup Outer Diameter	76.2 mm 3 in
B - Cone Width	25.654 mm 1.0100 in
C - Cup Width	19.050 mm 0.7500 in
T - Bearing Width	23.777 mm 0.9361 in

Abutment and Fillet Dimensions

R - Cone Backface "To Clear" Radius[1]	1.520 mm 0.06 in
r - Cup Backface "To Clear" Radius[2]	1.52 mm 0.06 in
da - Cone Frontface Backing Diameter	38.61 mm 1.52 in
db - Cone Backface Backing Diameter	40.89 mm 1.61 in
Da - Cup Frontface Backing Diameter	71.10 mm 2.80 in
Db - Cup Backface Backing Diameter	67.06 mm 2.64 in
Ab - Cage-Cone Frontface Clearance	1.5 mm 0.06 in
Aa - Cage-Cone Backface Clearance	1 mm 0.04 in
a - Effective Center Location[3]	-8.1 mm -0.32 in

Basic Load Ratings

C90 - Dynamic Radial Rating (90 million revolutions)[4]	22500 N 5060 lbf
C1 - Dynamic Radial Rating (1 million revolutions)[5]	86900 N 19500 lbf
C0 - Static Radial Rating	102000 N 23000 lbf
C_{a90} - Dynamic Thrust Rating (90 million revolutions)[6]	11700 N 2630 lbf

Factors

K - Factor[7]	1.93
e - ISO Factor[8]	0.3
Y - ISO Factor[9]	1.98
G1 - Heat Generation Factor (Roller-Raceway)	28.7
G2 - Heat Generation Factor (Rib-Roller End)	12.2
Cg - Geometry Factor	0.0725

[1] These maximum fillet radii will be cleared by the bearing corners.
[2] These maximum fillet radii will be cleared by the bearing corners.
[3] Negative value indicates effective center inside cone backface.
[4] Based on 90 x 10^6 revolutions L_{10} life, for The Timken Company life calculation method. C_{90} and C_{a90} are radial and thrust values.
[5] Based on 1 x 10^6 revolutions L_{10} life, for the ISO life calculation method.
[6] Based on 90 x 10^6 revolutions L_{10} life, for The Timken Company life calculation method. C_{90} and C_{a90} are radial and thrust values for a single-row, $C_{90(2)}$ is the two-row radial value.
[7] These factors apply for both inch and metric calculations. Consult your Timken representative for instruction on use.
[8] These factors apply for both inch and metric calculations. Consult your Timken representative for instruction on use.
[9] These factors apply for both inch and metric calculations. Consult your Timken representative for instruction on use.

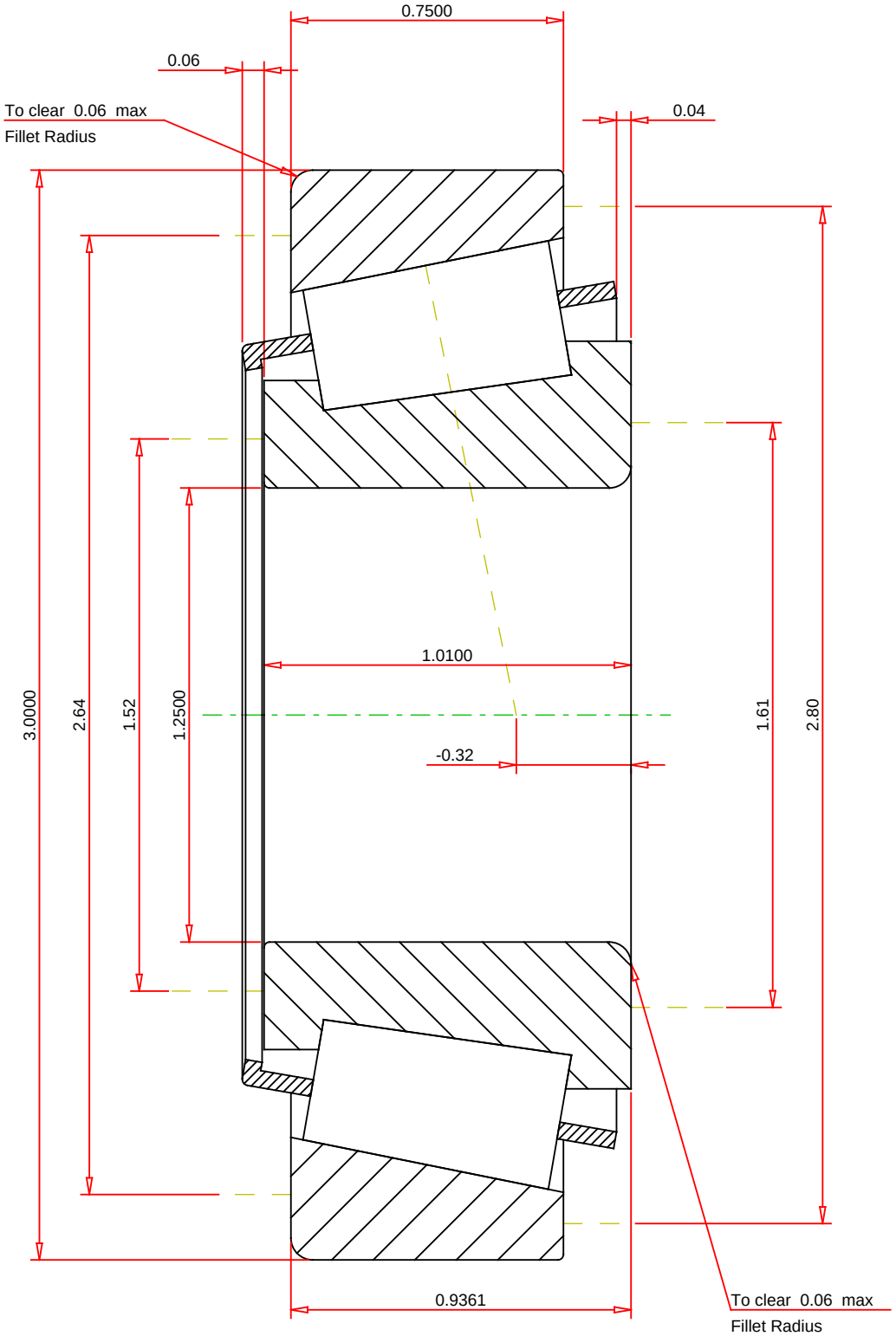

IMPERIAL UNITS

ISO Factor - e	0.3	
ISO Factor - Y	1.98	
Bearing Weight	1.3	lb
Number of Rollers Per Row	17	
Effective Center Location	-0.32	inch

TIMKEN®

THE TIMKEN COMPANY
NORTH CANTON, OHIO USA

2783 - 2729X
TS BEARING ASSEMBLY

K Factor	1.93	
Dynamic Radial Rating - C90	22500	lbf
Dynamic Thrust Rating - Ca90	11700	lbf
Static Radial Rating - C0	102000	lbf
Dynamic Radial Rating - C1	86900	lbf

Every reasonable effort has been made to ensure the accuracy of the information contained in this writing, but no liability is accepted for errors, omissions or for any other reason.

FOR DISCUSSION ONLY