The Timken Company
4500 Mt Pleasant St. NW
N. Canton, OH 44720
Phone: (234) 262-3000
E-Mail: CustomerCAD@timken.com • **Web site:** www.timken.com

Timken Part Number VAK 3/4, Pillow Block Units Eccentric Locking Collar (Includes Industrial and Standard Series)



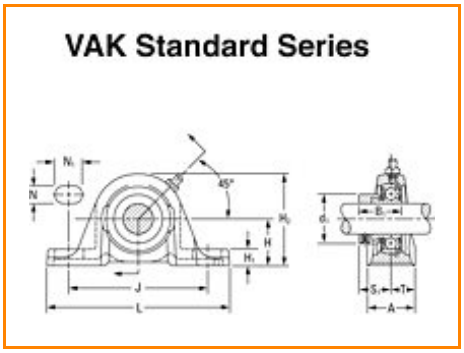

Specifications | Dimensions | Basic Load Ratings

Specifications

Bore Size d	3/4 in 19.1 mm
Bearing Number	GRA012RRB
Inside Ring Outside Diameter	0.531 in 13.5 mm
Dimension B1	1.220 in 31 mm
Dimension T	0.626 in 15.9 mm
Series	Standard
Weight	1.241 lb 0.563 Kg
Seal Type	Molded Shroud

Dimensions

Shaft Height H	31.75 mm 1.250 in
Total Length L	127 mm 5.000 in
Total Width A	1.252 in 31.8 mm
Bolt Hole Spacing J	96 mm 3.780 in
Bolt Hole Width N	11.1 mm 0.437 in
Bolt Hole Length N1	19.8 mm 0.780 in
Base Height H1	11.9 mm 0.469 in
Total Height H2	62.7 mm 2.469 in
Dimension L1	42.3 mm 1.665 in
Inside Ring Width B	N/A
Center of Bearing from End S	7.6 mm 0.299 in

Basic Load Ratings

Static Load Rating	1400 lbf 6200 N
Dynamic Load Rating	3200 lbf 14300 N

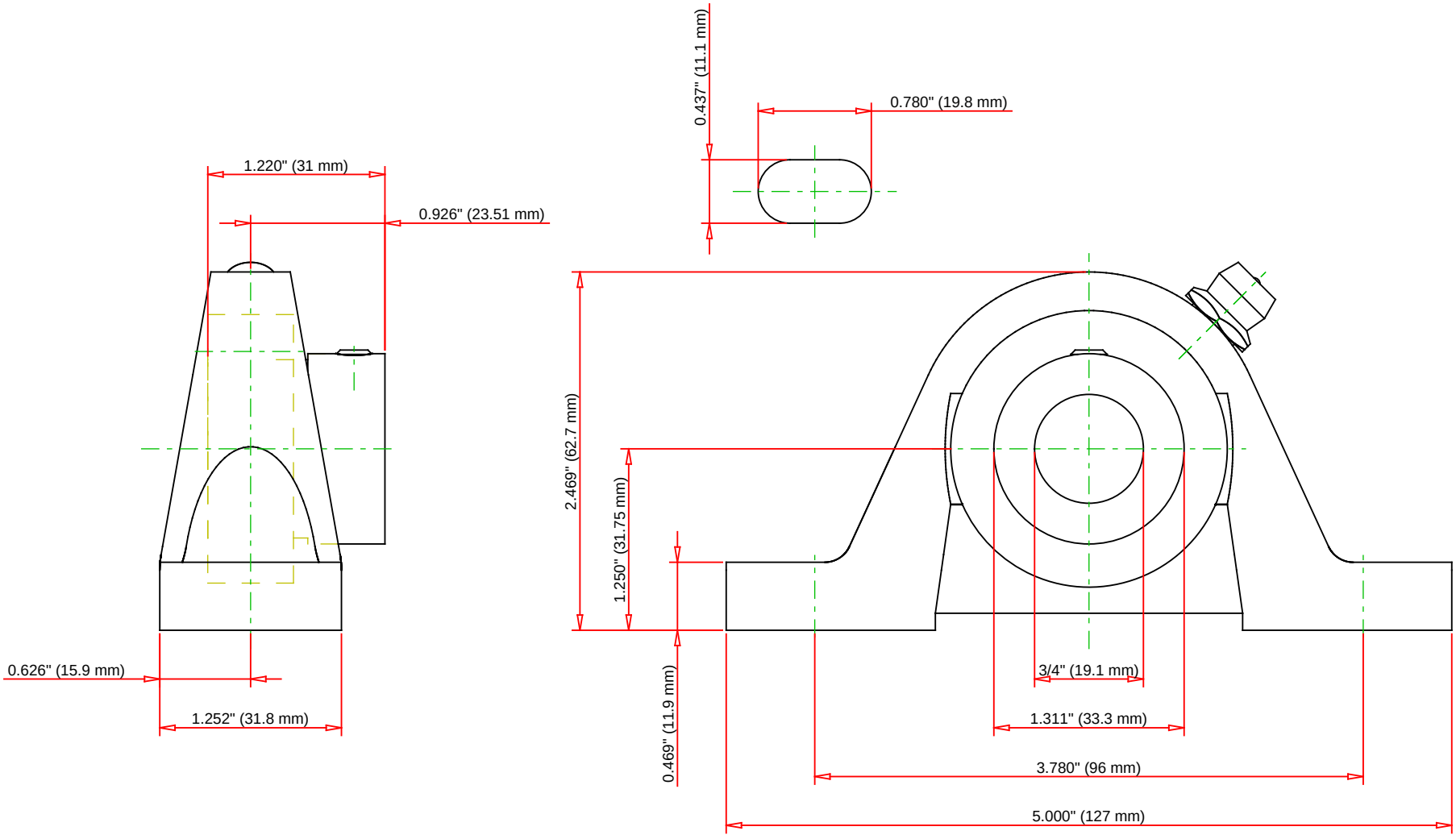

Bearing Number	GRA012RRB				
Load Ratings - C_r	3200	lbf	14300	N	
Load Ratings - C_{0r}	1400	lbf	6200	N	
Weight	1.241	lb	0.563	kg	

TIMKEN

THE TIMKEN COMPANY
NORTH CANTON, OHIO USA

VAK 3/4

Pillow Block Units Eccentric Locking Collar
(Includes Industrial and Standard Series)

Every reasonable effort has been made to ensure the accuracy of the information contained in this writing, but no liability is accepted for errors, omissions or for any other reason.

FOR DISCUSSION ONLY