The Timken Company
4500 Mt Pleasant St. NW
N. Canton, OH 44720
Phone: (234) 262-3000
E-Mail: CustomerCAD@timken.com • **Web site:** www.timken.com

Part Number GYE45KRRB SGT, Fafnir® Wide Inner Ring Setscrew Locking Ball Bearings



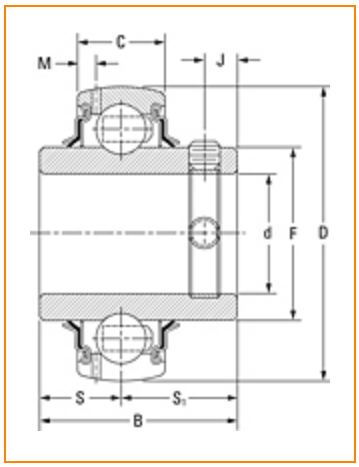

Specifications | Dimensions | Basic Load Ratings

Specifications

Shaft Size d	1.772 in 45 mm
Bore Type	Cylindrical bore
Bearing Type	Ball Bearing
Material	Bearing Steel
Lubrication Type	Relubricatable
O.D. Type	Spherical OD
Dimension M	0.179 in 4.55 mm
Series	Industrial
Weight	0.50 lb 0.2 Kg

Sub Series	GYE..KRRB SGT
Alternate Part Name	GYE45KRRBSGT
Seal Type	Shroud Seal

Dimensions

Outside Diameter D	3.346 in 85.000 mm
Inner Ring Width B	50.37 mm 1.983 in
Outside Ring Width C	22.000 mm 0.866 in
Radius r	0.6 mm 0.024 in
Center of Bearing from End S	19.05 mm 0.750 in
Dimension S1	31.32 mm 1.233 in
Set Screw Distance S2	9.14 mm 0.360 in
Set Screw Size	M8x1.25
Number of Set Screws	2
Angle between Set Screws	90 °

Basic Load Ratings

Static Load Rating	4600 lbf 20500 N
Dynamic Load Rating	8160 lbf 36300 N

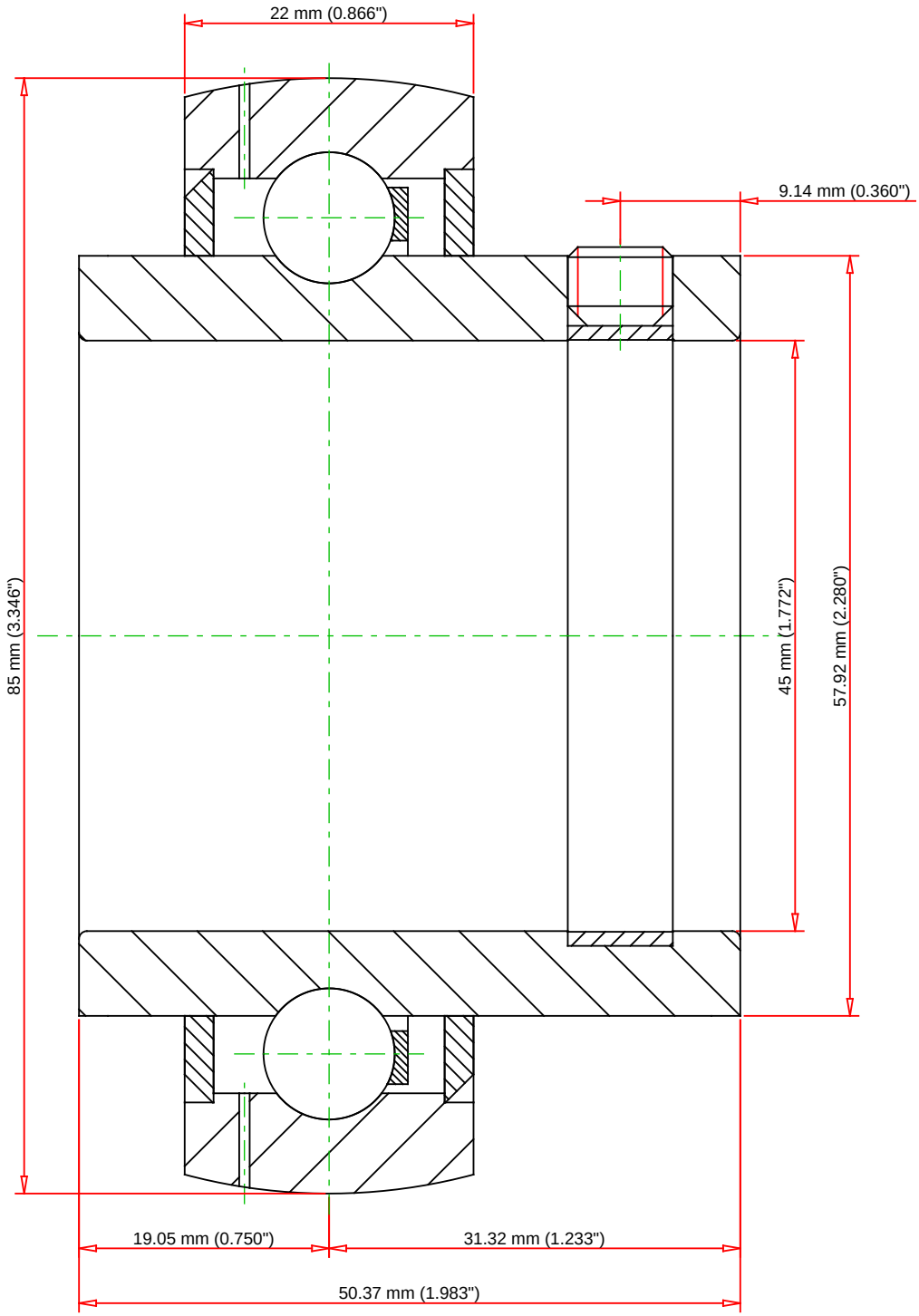

Weight	0.5 lb	0.2 kg

TIMKEN®

THE TIMKEN COMPANY
NORTH CANTON, OHIO USA

GYE45KRRB SGT

Fafnir® Wide Inner Ring Setscrew Locking Ball Bearings

Basic Load Ratings - C_r	8150 lbf	36000 N
Load Ratings - C_{0r}	4500 lbf	20000 N

Every reasonable effort has been made to ensure the accuracy of the information contained in this writing, but no liability is accepted for errors, omissions or for any other reason.

FOR DISCUSSION ONLY