The Timken Company
4500 Mt Pleasant St. NW
N. Canton, OH 44720
Phone: (234) 262-3000
E-Mail: CustomerCAD@timken.com • **Web site:** www.timken.com

Timken Part Number 18690 - 18620, Tapered Roller Bearings - TS (Tapered Single) Imperial

This is the most basic and most widely used type of tapered roller bearing. It consists of two main separable parts: the cone (inner ring) assembly and the cup (outer ring). It is typically mounted in opposing pairs on a shaft.



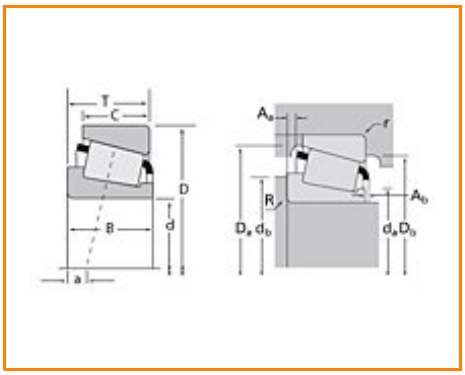

Specifications | Dimensions | Abutment and Fillet Dimensions | Basic Load Ratings | Factors

Specifications

Series	18600
Cone Part Number	18690
Cup Part Number	18620
Design Units	Imperial
Bearing Weight	0.300 Kg 0.70 lb
Cage Type	Stamped Steel

Dimensions

d - Bore	46.038 mm 1.8125 in

D - Cup Outer Diameter	79.375 mm 3.1250 in
B - Cone Width	17.463 mm 0.6875 in
C - Cup Width	13.495 mm 0.5313 in
T - Bearing Width	17.463 mm 0.6875 in

Abutment and Fillet Dimensions

R - Cone Backface "To Clear" Radius[1]	2.790 mm 0.110 in
r - Cup Backface "To Clear" Radius[2]	1.52 mm 0.06 in
da - Cone Frontface Backing Diameter	51.05 mm 2.01 in
db - Cone Backface Backing Diameter	55.88 mm 2.20 in
Da - Cup Frontface Backing Diameter	74.68 mm 2.94 in
Db - Cup Backface Backing Diameter	71.12 mm 2.8 in
Ab - Cage-Cone Frontface Clearance	2.3 mm 0.09 in
Aa - Cage-Cone Backface Clearance	0.3 mm 0.01 in
a - Effective Center Location[3]	-2 mm -0.08 in

Basic Load Ratings

C90 - Dynamic Radial Rating (90 million revolutions)[4]	13500 N 3030 lbf
C1 - Dynamic Radial Rating (1 million revolutions)[5]	52000 N 11700 lbf
C0 - Static Radial Rating	61300 N 13800 lbf
C_{a90} - Dynamic Thrust Rating (90 million revolutions)[6]	8630 N 1940 lbf

Factors

K - Factor[7]	1.56
e - ISO Factor[8]	0.37
Y - ISO Factor[9]	1.60
G1 - Heat Generation Factor (Roller-Raceway)	23.9
G2 - Heat Generation Factor (Rib-Roller End)	17.7
Cg - Geometry Factor	0.0725

[1] These maximum fillet radii will be cleared by the bearing corners.
[2] These maximum fillet radii will be cleared by the bearing corners.
[3] Negative value indicates effective center inside cone backface.
[4] Based on 90 x 10^6 revolutions L_{10} life, for The Timken Company life calculation method. C_{90} and C_{a90} are radial and thrust values.
[5] Based on 1 x 10^6 revolutions L_{10} life, for the ISO life calculation method.
[6] Based on 90 x 10^6 revolutions L_{10} life, for The Timken Company life calculation method. C_{90} and C_{a90} are radial and thrust values for a single-row, $C_{90(2)}$ is the two-row radial value.
[7] These factors apply for both inch and metric calculations. Consult your Timken representative for instruction on use.
[8] These factors apply for both inch and metric calculations. Consult your Timken representative for instruction on use.
[9] These factors apply for both inch and metric calculations. Consult your Timken representative for instruction on use.

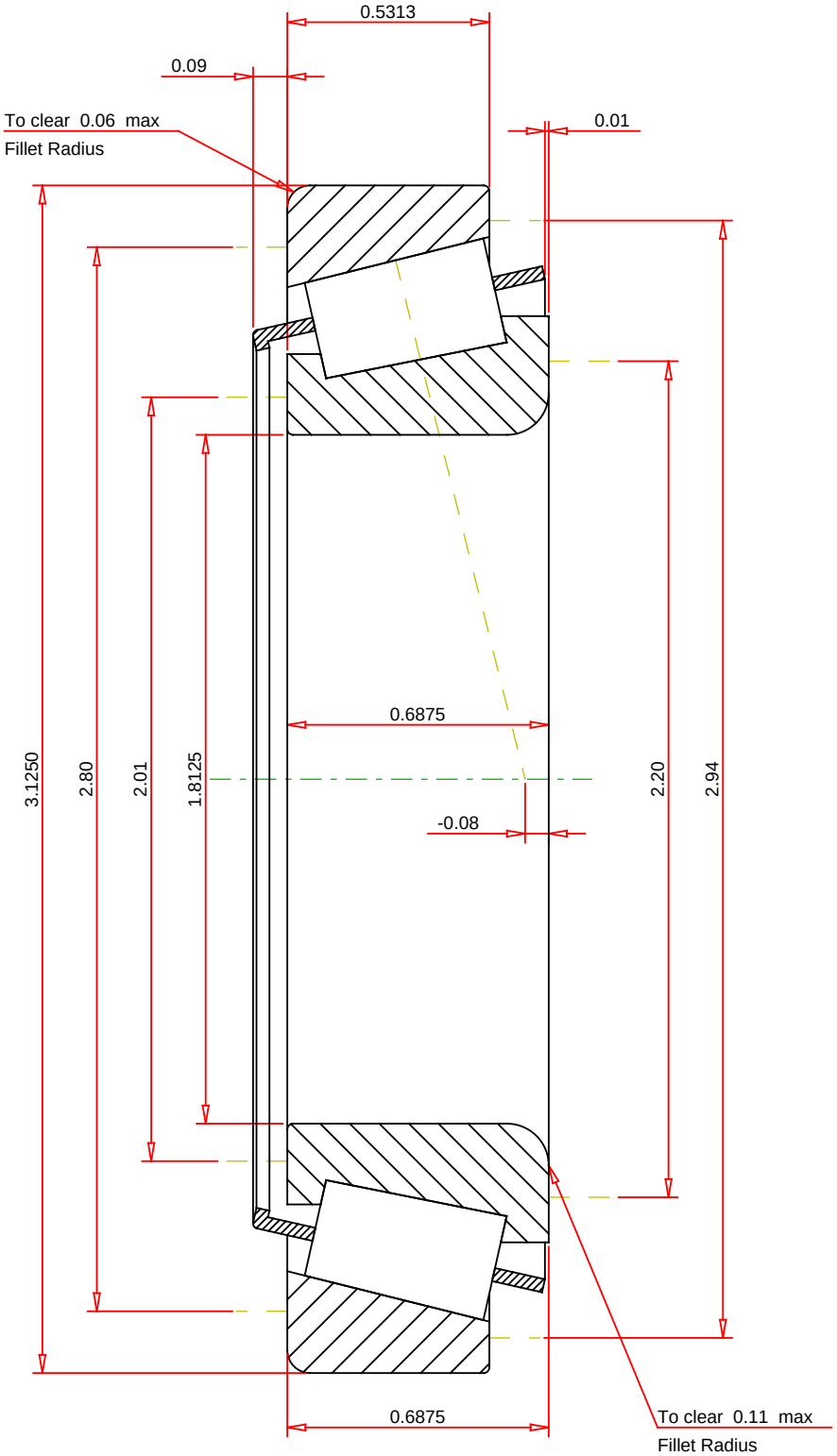

IMPERIAL UNITS

ISO Factor - e	0.37	
ISO Factor - Y	1.6	
Bearing Weight	0.7	lb
Number of Rollers Per Row	20	
Effective Center Location	-0.08	inch

TIMKEN®

THE TIMKEN COMPANY
NORTH CANTON, OHIO USA

18690 - 18620
TS BEARING ASSEMBLY

K Factor	1.56	
Dynamic Radial Rating - C90	13500	lbf
Dynamic Thrust Rating - Ca90	8630	lbf
Static Radial Rating - C0	61300	lbf
Dynamic Radial Rating - C1	52000	lbf

Every reasonable effort has been made to ensure the accuracy of the information contained in this writing, but no liability is accepted for errors, omissions or for any other reason.

FOR DISCUSSION ONLY