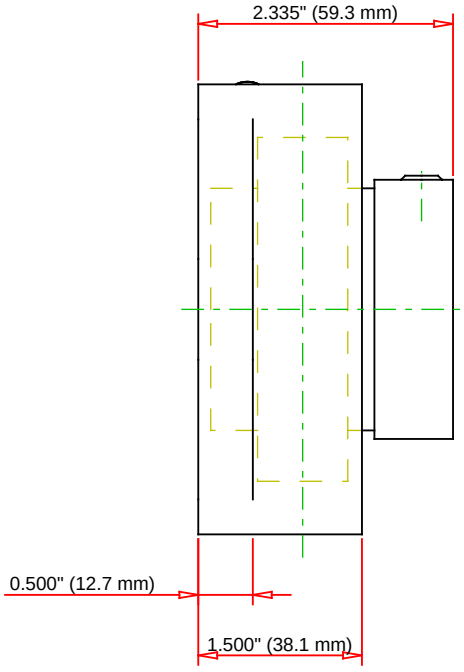

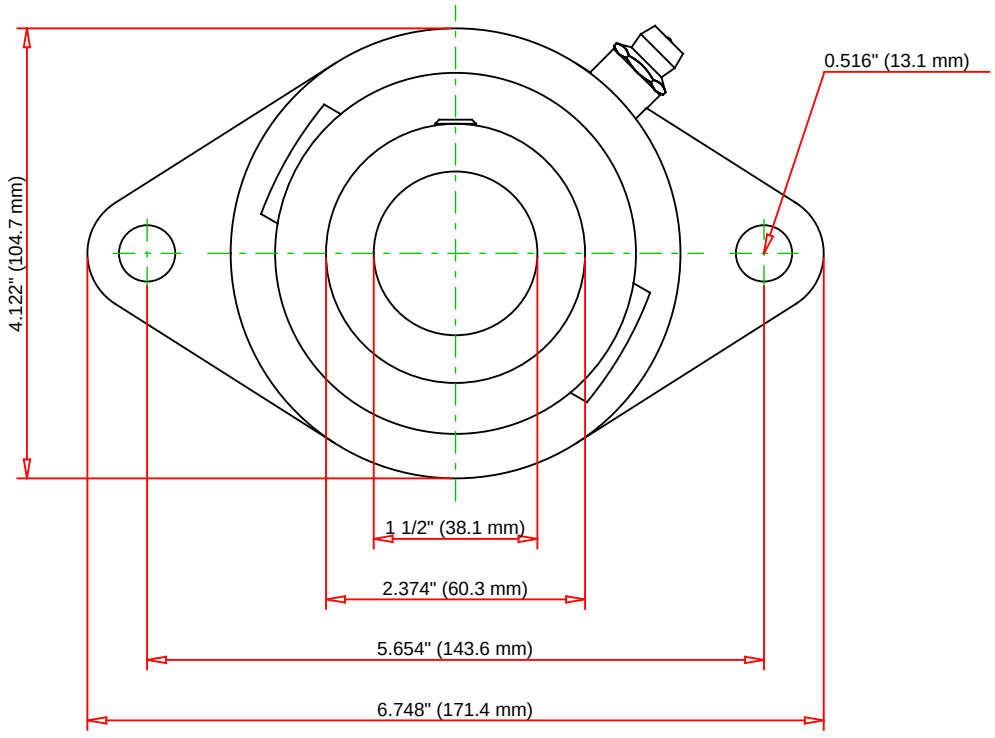

Bearing Number	G1108KPPB3			
Load Ratings - C_r	8130	lbf	36200	N
Load Ratings - C_{0r}	4460	lbf	19800	N
Weight	4.835	lb	2.193	kg

TIMKEN

THE TIMKEN COMPANY
NORTH CANTON, OHIO USA

TCJT 1 1/2

Fafnir® Two-Bolt Flanged Units Eccentric Locking Collar

Every reasonable effort has been made to ensure the accuracy of the information contained in this writing, but no liability is accepted for errors, omissions or for any other reason.

FOR DISCUSSION ONLY