The Timken Company
4500 Mt Pleasant St. NW
N. Canton, OH 44720
Phone: (234) 262-3000
E-Mail: CustomerCAD@timken.com • **Web site:** www.timken.com

Part Number TCJT 1 1/2, Fafnir® Two-Bolt Flanged Units Eccentric Locking Collar



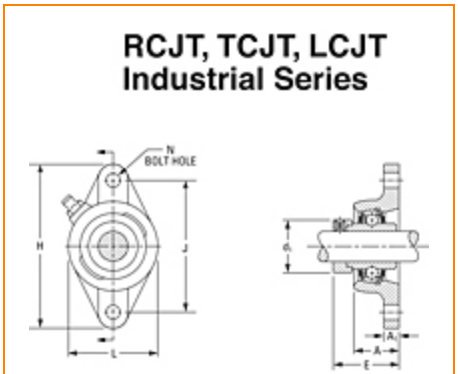

Specifications | Dimensions | Basic Load Ratings

Specifications

Shaft Size d	38.1 mm
Bearing Type	Ball Bearing
Bearing Number	G1108KPPB3
Dimension E	59.3 mm
Inside Ring Outside Diameter	58.2 mm
e	2.334 mm
Series	Industrial
Weight	2.193 Kg
Seal Type	Tri-Ply Seal
Housing Construction	Two-Bolt Flange
Alternate Part Name	TCJT1 1/2

Dimensions

Housing Width A	38.10 mm
Total Length H	171.4 mm
Total Height L	104.7 mm
Bolt Hole Spacing J	143.6 mm
Bolt Hole Size N	13.1 mm
Flange Thickness A1	12.70 mm
Center of Bearing from Housing End A2	0.96 mm
Inside Ring Width B	0 mm

Basic Load Ratings

Static Load Rating	19800 N
Dynamic Load Rating	36200 N

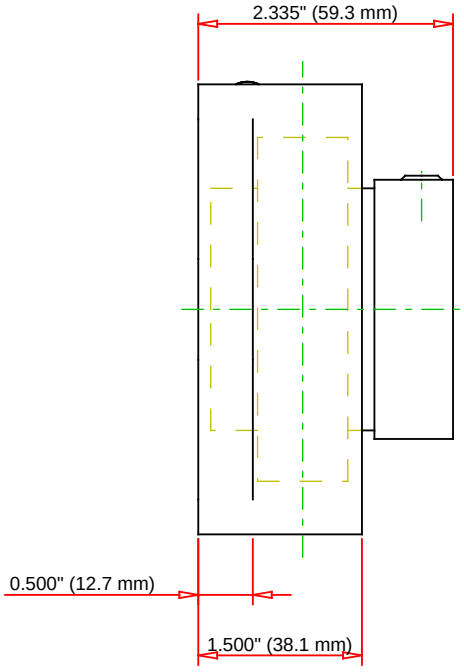

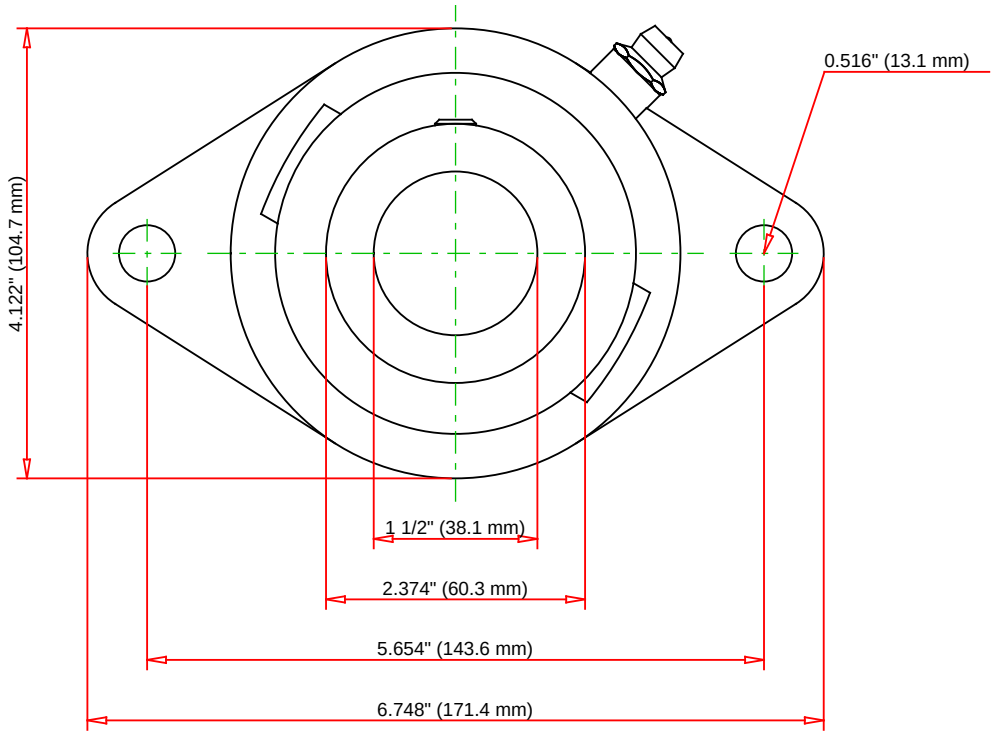

Bearing Number	G1108KPPB3			
Load Ratings - C_r	8130	lbf	36200	N
Load Ratings - C_{0r}	4460	lbf	19800	N
Weight	4.835	lb	2.193	kg

TIMKEN

THE TIMKEN COMPANY
NORTH CANTON, OHIO USA

TCJT 1 1/2

Fafnir® Two-Bolt Flanged Units Eccentric Locking Collar

Every reasonable effort has been made to ensure the accuracy of the information contained in this writing, but no liability is accepted for errors, omissions or for any other reason.

FOR DISCUSSION ONLY