The Timken Company
4500 Mt Pleasant St. NW
N. Canton, OH 44720
Phone: (234) 262-3000
E-Mail: CustomerCAD@timken.com • **Web site:** www.timken.com

Timken Part Number VCJT 1 1/2, Two-Bolt Flanged Units Eccentric Locking Collar (Includes Industrial and Standard Series)



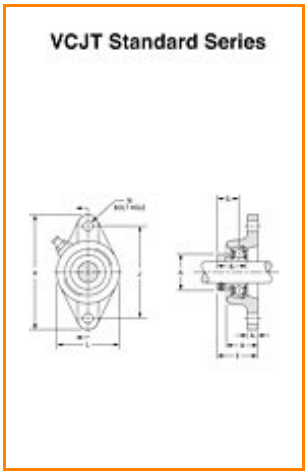

Specifications | Dimensions | Basic Load Ratings

Specifications

Bore Size d	1 1/2 in 38.1 mm
Bearing Number	GRA108RRB
Dimension E	2.240 in 56.9 mm
Inside Ring Outside Diameter	2.291 in 58.2 mm
Series	Standard
Weight	4.575 lb 2.075 Kg
Seal Type	Molded Shroud

Dimensions

Total Width A	38.1 mm 1.500 in
Total Length H	171.4 mm 6.748 in
Total Height L	104.7 mm 4.122 in
Bolt Hole Spacing J	143.6 mm 5.654 in
Bolt Hole Size N	13.1 mm 0.516 in
Flange Thickness A1	12.7 mm 0.500 in
Center of Bearing from Housing End A2	24.4 mm 0.961 in
Inside Ring Width B	43.7 mm 1.720 in
Center of Bearing from Bearing End S	24.4 mm 0.961 in

Basic Load Ratings

Static Load Rating	8100 lbf 36000 N
Dynamic Load Rating	4400 lbf 19600 N

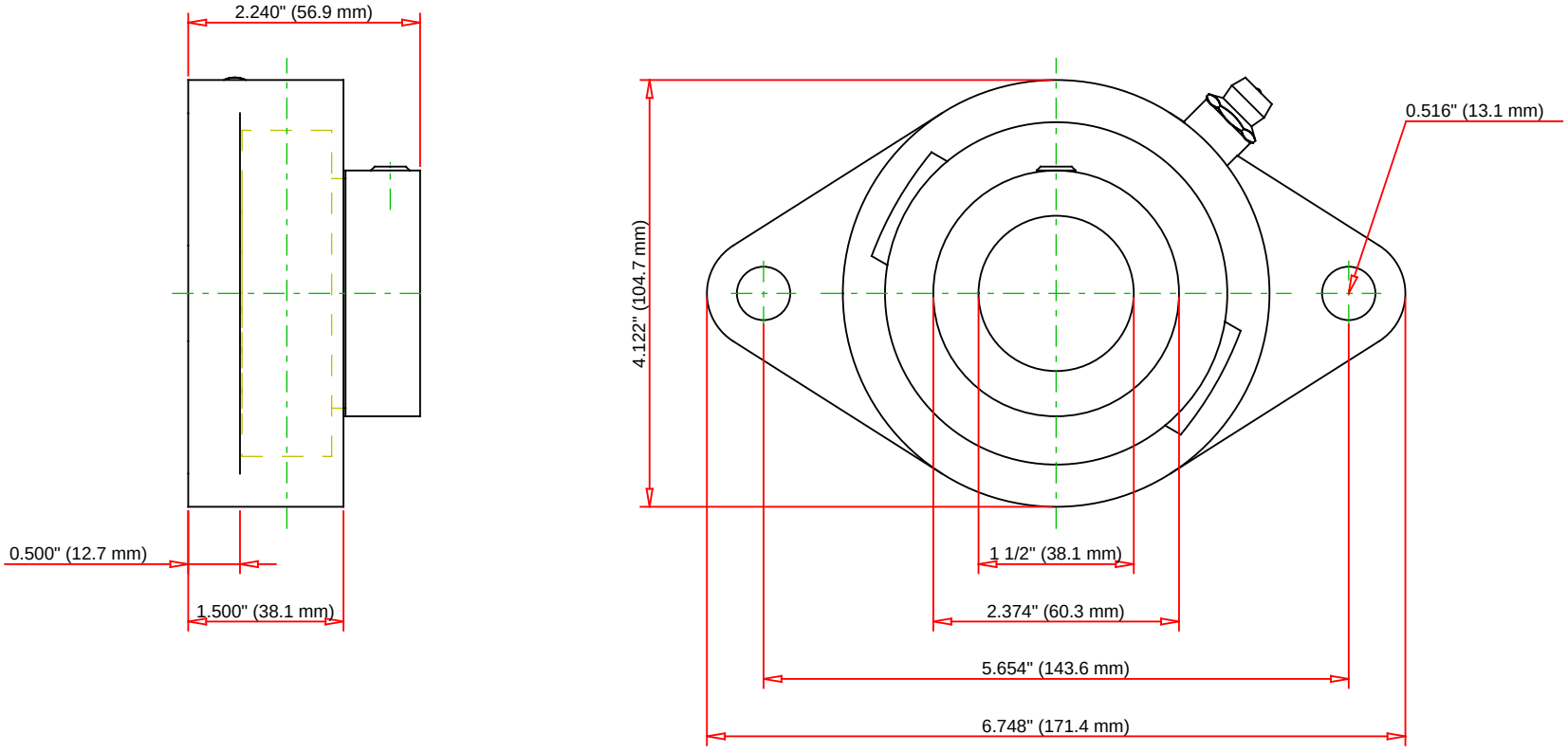

Bearing Number	GRA108RRB			
Load Ratings - C_r	8150	lbf	36000	N
Load Ratings - C_{0r}	4400	lbf	19600	N
Weight	4.575	lb	2.075	kg

TIMKEN

THE TIMKEN COMPANY
NORTH CANTON, OHIO USA

VCJT 1 1/2

Two-Bolt Flanged Units Eccentric Locking Collar
(Includes Industrial and Standard Series)

Every reasonable effort has been made to ensure the accuracy of the information contained in this writing, but no liability is accepted for errors, omissions or for any other reason.

FOR DISCUSSION ONLY