The Timken Company
4500 Mt Pleasant St. NW
N. Canton, OH 44720
Phone: (234) 262-3000
E-Mail: CustomerCAD@timken.com • **Web site:** www.timken.com

Part Number YCJM2 1/4, Fafnir® Four-Bolt Flanged Units Setscrew Locking



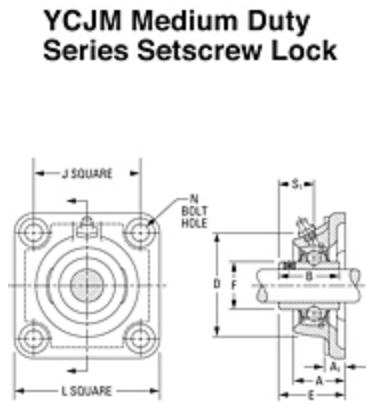

Specifications | Dimensions | Basic Load Ratings

Specifications

Shaft Size d	2 1/4 in 57.2 mm
Bearing Number	GY1204KRRB
Dimension D	5.374 in 136.5 mm
Dimension E	2.925 in 74.3 mm
Inside Ring Outside Diameter	3.011 in 76.48 mm
Series	Medium-Duty
Weight	9.69 lb 4.4 Kg
Seal Type	Shroud Seal

Housing Construction	Four-Bolt Square Flange
Alternate Part Name	YCJM21/4

Dimensions

Total Length L	174.6 mm 6.874 in
Housing Width A	1.937 in 49.2 mm
Bolt Hole Size N	16 mm 0.630 in
Flange Thickness A1	17.5 mm 0.689 in
Center of Bearing from Housing End A2	35.2 mm 1.386 in
Inside Ring Width B	N/A
Total Height	174.6 mm 6.874 in
Bolt Size	M16
Center of Bearing from Bearing End S	26 mm 1.024 in

Basic Load Ratings

Static Load Rating	8080 lbf 35900 N
Dynamic Load Rating	13100 lbf 58200 N

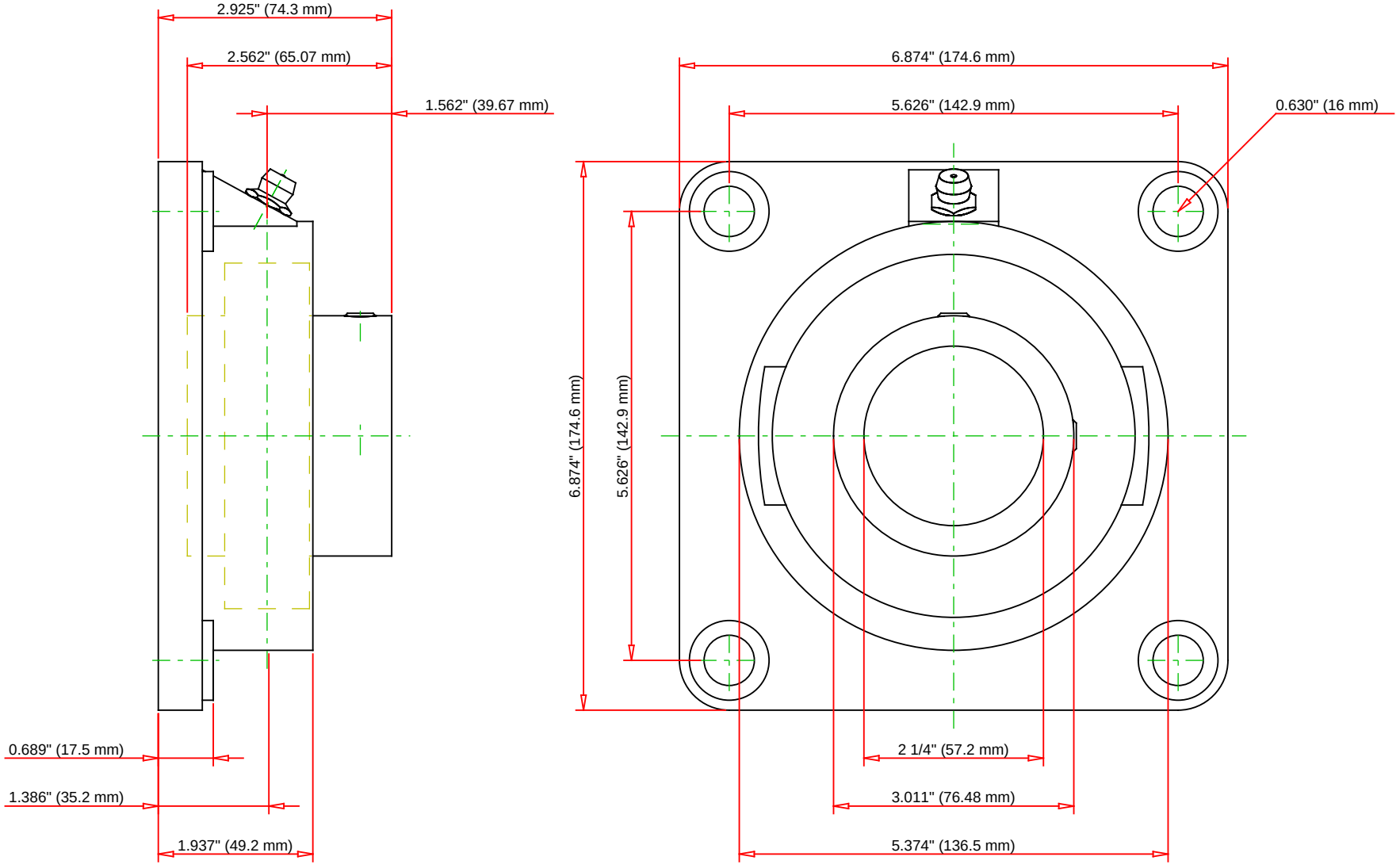

Bearing Number	GY1204KRRB			
Load Ratings - C_r	13200	lbf	58800	N
Load Ratings - C_{0r}	8000	lbf	35600	N
Weight	0	lb	0	kg
Bolt Size	M10x1.5			

TIMKEN

THE TIMKEN COMPANY
NORTH CANTON, OHIO USA

YCJM2 1/4

Fafnir® Four-Bolt Flanged Units Setscrew Locking

Every reasonable effort has been made to ensure the accuracy of the information contained in this writing, but no liability is accepted for errors, omissions or for any other reason.

FOR DISCUSSION ONLY