The Timken Company
4500 Mt Pleasant St. NW
N. Canton, OH 44720
Phone: (234) 262-3000
E-Mail: CustomerCAD@timken.com • **Web site:** www.timken.com

Timken Part Number LM29749N - LM29711, Tapered Roller Bearings - TS (Tapered Single) Imperial

This is the most basic and most widely used type of tapered roller bearing. It consists of two main separable parts: the cone (inner ring) assembly and the cup (outer ring). It is typically mounted in opposing pairs on a shaft.



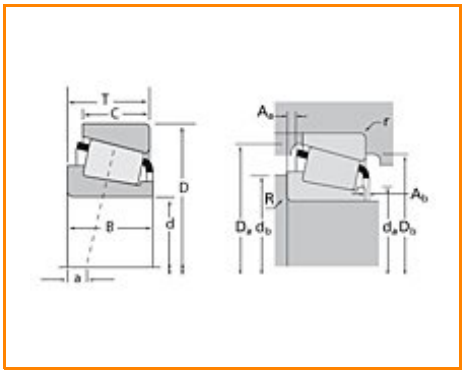

Specifications | Dimensions | Abutment and Fillet Dimensions | Basic Load Ratings | Factors

Specifications

Series	LM29700
Cone Part Number	LM29749N
Cup Part Number	LM29711
Design Units	Imperial
Bearing Weight	0.300 Kg 0.60 lb
Cage Type	Stamped Steel

Dimensions

d - Bore	38.1 mm 1.5 in
D - Cup Outer Diameter	65.088 mm 2.5625 in
B - Cone Width	18.288 mm 0.7200 in
C - Cup Width	15.748 mm 0.6200 in
T - Bearing Width	19.812 mm 0.7800 in

Abutment and Fillet Dimensions

R - Cone Backface "To Clear" Radius[1]	2.290 mm 0.090 in
r - Cup Backface "To Clear" Radius[2]	1.27 mm 0.050 in
da - Cone Frontface Backing Diameter	42.42 mm 1.67 in
db - Cone Backface Backing Diameter	45.97 mm 1.81 in
Da - Cup Frontface Backing Diameter	62.00 mm 2.46 in
Db - Cup Backface Backing Diameter	57.91 mm 2.28 in
Ab - Cage-Cone Frontface Clearance	1.8 mm 0.07 in
Aa - Cage-Cone Backface Clearance	0.3 mm 0.01 in
a - Effective Center Location[3]	-4.30 mm -0.17 in

Basic Load Ratings

C90 - Dynamic Radial Rating (90 million revolutions)[4]	14900 N 3360 lbf
C1 - Dynamic Radial Rating (1 million revolutions)[5]	57600 N 12900 lbf
C0 - Static Radial Rating	60300 N 13600 lbf
C_{a90} - Dynamic Thrust Rating (90 million revolutions)[6]	8500 N 1910 lbf

Factors

K - Factor[7]	1.76
e - ISO Factor[8]	0.33
Y - ISO Factor[9]	1.8
G1 - Heat Generation Factor (Roller-Raceway)	20.4
G2 - Heat Generation Factor (Rib-Roller End)	15
Cg - Geometry Factor	0.0666

[1] These maximum fillet radii will be cleared by the bearing corners.

[2] These maximum fillet radii will be cleared by the bearing corners.

[3] Negative value indicates effective center inside cone backface.

[4] Based on 90 x 10^6 revolutions L_{10} life, for The Timken Company life calculation method. C_{90} and C_{a90} are radial and thrust values.

[5] Based on 1 x 10^6 revolutions L_{10} life, for the ISO life calculation method.

[6] Based on 90 x 10^6 revolutions L_{10} life, for The Timken Company life calculation method. C_{90} and C_{a90} are radial and thrust values for a single-row, $C_{90(2)}$ is the two-row radial value.

[7] These factors apply for both inch and metric calculations. Consult your Timken representative for instruction on use.

[8] These factors apply for both inch and metric calculations. Consult your Timken representative for instruction

on use.

[9] These factors apply for both inch and metric calculations. Consult your Timken representative for instruction on use.

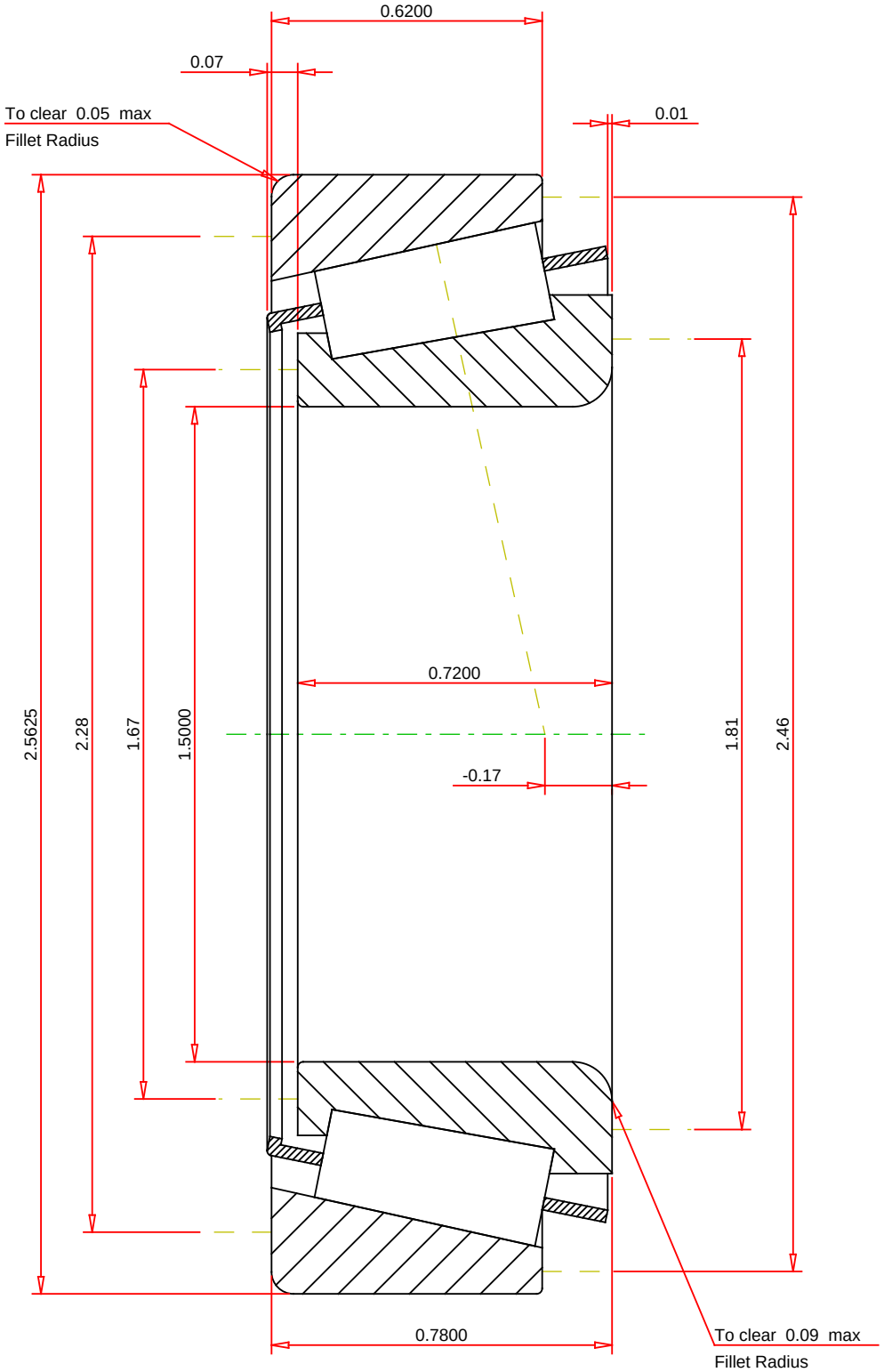

IMPERIAL UNITS

ISO Factor - e	0.33	
ISO Factor - Y	1.8	
Bearing Weight	0.6	lb
Number of Rollers Per Row	21	
Effective Center Location	-0.17	inch

TIMKEN®

THE TIMKEN COMPANY
NORTH CANTON, OHIO USA

LM29749N - LM29711
TS BEARING ASSEMBLY

K Factor	1.76	
Dynamic Radial Rating - C90	14900	lbf
Dynamic Thrust Rating - Ca90	8500	lbf
Static Radial Rating - C0	60300	lbf
Dynamic Radial Rating - C1	57600	lbf

Every reasonable effort has been made to ensure the accuracy of the information contained in this writing, but no liability is accepted for errors, omissions or for any other reason.

FOR DISCUSSION ONLY