The Timken Company
4500 Mt Pleasant St. NW
N. Canton, OH 44720
Phone: (234) 262-3000
E-Mail: CustomerCAD@timken.com • **Web site:** www.timken.com

Timken Part Number N 11-W 11, Inch Accessories - Locknut and Lockwasher

- The chart below shows dimensions for locknuts and lockwashers used in the mounting of straight bore bearings on shafts.
- Other dimensions and tolerances related to shaft configurations are also shown.
- Dimensions are presented according to bearing bore size and are applicable to bearings in the various series (e.g., 222 and 223 etc.).

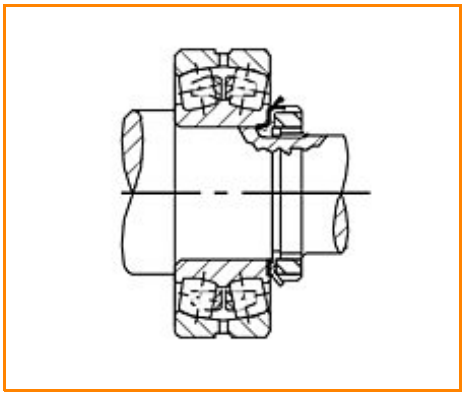

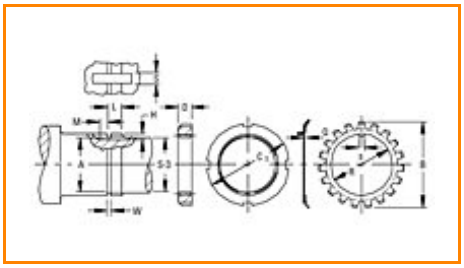

Specifications | Threads | Shaft | Locknut | Lockwasher

Specifications

Bearing Bore	55 mm
Threads No. per Inch	18
Locknut	N 11
Lockwasher	W 11

Threads

Max. Major Diameter	54.79 mm 2.157 in

Min. Major Diameter	54.58 mm 2.1488 in
Max. Pitch Diameter	53.87 mm 2.1209 in
Min. Pitch Diameter	53.74 mm 2.1158 in
Minor Diameter	53.06 mm 2.0888 in

Shaft

Relief Diameter A	52.66 mm 2.0732 in
Diameter S-3	52.39 mm 2 1/16 in
W[1]	3.2 mm 1/8 in
L[2]	15.10 mm 0.5938 in
H[3]	3.2 mm 1/8 in
S[4]	7.4 mm 7.9 mm 0.290 in 5/16 in
M[5]	4.00 mm 5/32 in

Locknut

C_1	75.40 mm 2 31/32 in

D	13.00 mm 0.5100 in

Lockwasher

Q	1.60 mm 0.063 in
R	56.1 mm 2.207 in
B	79.00 mm 3 7/64 in

[1] Tolerance -0 to + 0.4 mm (-0 to +1/64 in)
[2] Tolerance -0 to + 0.4 mm (-0 to +1/64 in)
[3] Tolerance -0 to + 0.4 mm (-0 to +1/64 in)
[4] Tolerance -0 to + 0.4 mm (-0 to +1/64 in)
[5] Tolerance -0 to + 0.4 mm (-0 to +1/64 in)