The Timken Company
4500 Mt Pleasant St. NW
N. Canton, OH 44720
Phone: (234) 262-3000
E-Mail: CustomerCAD@timken.com • **Web site:** www.timken.com

Timken Part Number SAS 1/2, Pillow Block Units Setscrew Locking (Includes Industrial and Standard Series)



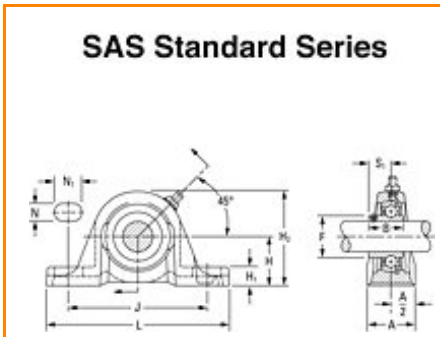

Specifications | Dimensions | Basic Load Ratings

Specifications

Bore Size d	1/2 in 12.7 mm
Bearing Number	GYA008RRB
Inside Ring Outside Diameter	0.950 in 24.1 mm
Dimension B1	0.937 in 23.8 mm
Dimension T	0.594 in 15.1 mm
Dimension D1	0.969 in 24.6 mm
Series	Standard
Weight	0.926 lb 0.420 Kg

Seal Type	Narrow Shroud

Dimensions

Shaft Height H	30.16 mm 1.187 in
Total Length L	123.8 mm 4.874 in
Total Width A	1.189 in 30.2 mm
Bolt Hole Spacing J	92.1 mm 3.626 in
Bolt Hole Width N	11.1 mm 0.437 in
Bolt Hole Length N1	22.2 mm 0.874 in
Base Height H1	11.9 mm 0.469 in
Total Height H2	56.4 mm 2.220 in
Dimension L1	41.3 mm 1.626 in
Inside Ring Width B	N/A
Center of Bearing from End S	7.9 mm 0.311 in

Basic Load Ratings

Static Load Rating	1100 lbf 4700 N

Dynamic Load Rating	2400 lbf 10600 N

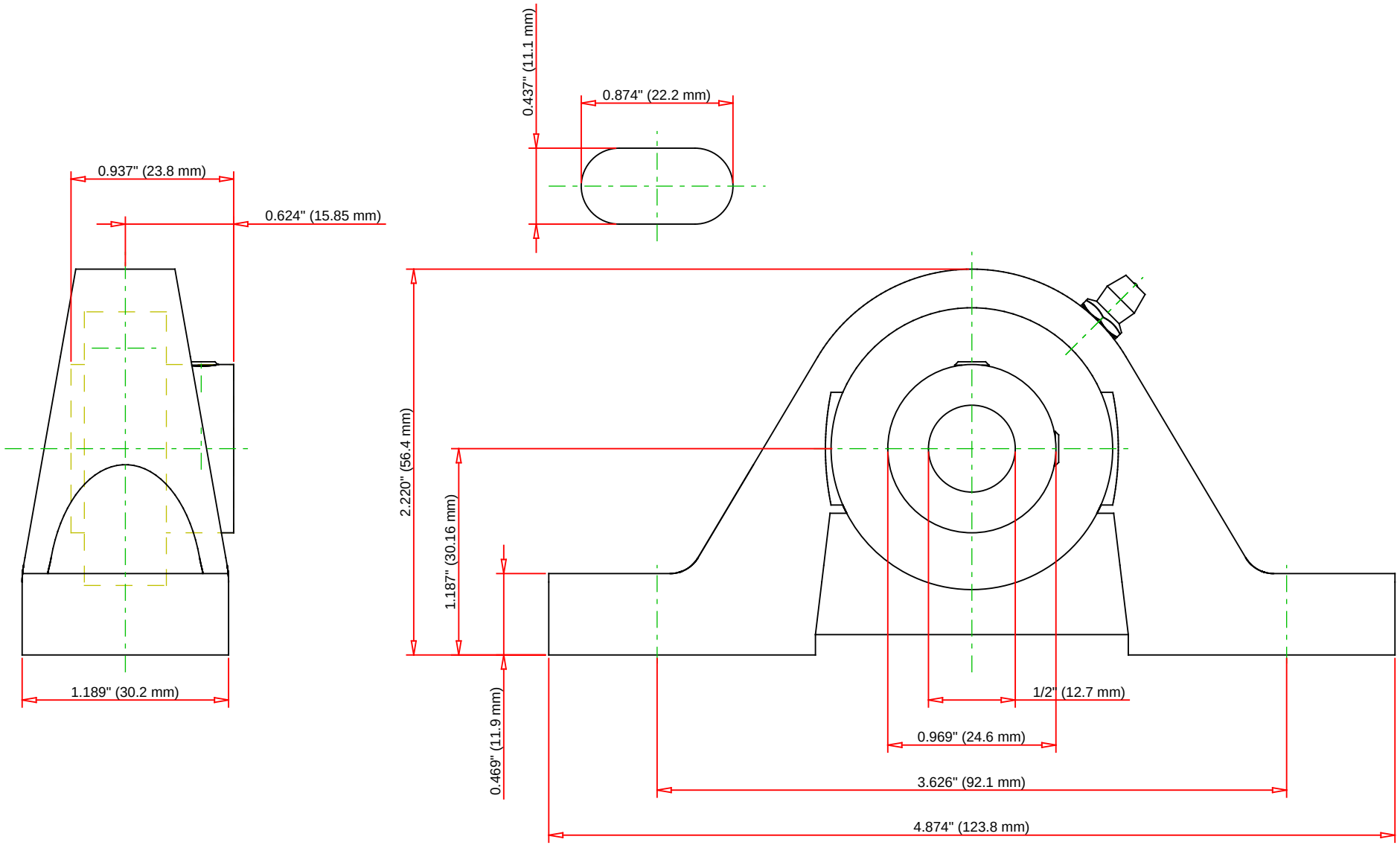

Bearing Number	GYA008RRB				
Load Ratings - C_r	2360	lbf	10600	N	
Load Ratings - C_{0r}	1060	lbf	4700	N	
Weight	0.926	lb	0.42	kg	
Bolt Size	M5x0.8				

TIMKEN

THE TIMKEN COMPANY
NORTH CANTON, OHIO USA

SAS 1/2

Pillow Block Units Setscrew Locking (Includes Industrial and Standard Series)

Every reasonable effort has been made to ensure the accuracy of the information contained in this writing, but no liability is accepted for errors, omissions or for any other reason.

FOR DISCUSSION ONLY