The Timken Company
4500 Mt Pleasant St. NW
N. Canton, OH 44720
Phone: (234) 262-3000
E-Mail: CustomerCAD@timken.com • **Web site:** www.timken.com

Timken Part Number 2690 - 2631, Tapered Roller Bearings - TS (Tapered Single) Imperial

This is the most basic and most widely used type of tapered roller bearing. It consists of two main separable parts: the cone (inner ring) assembly and the cup (outer ring). It is typically mounted in opposing pairs on a shaft.



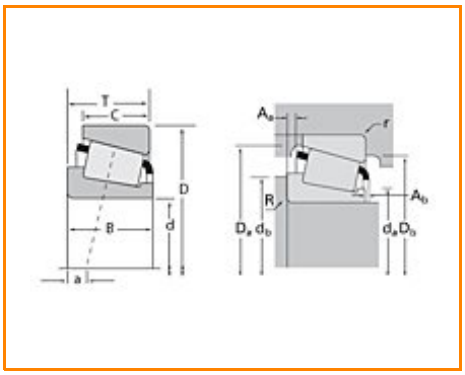

Specifications | Dimensions | Abutment and Fillet Dimensions | Basic Load Ratings | Factors

Specifications

Series	2600
Cone Part Number	2690
Cup Part Number	2631
Design Units	Imperial
Bearing Weight	0.400 Kg 0.90 lb
Cage Type	Stamped Steel

Dimensions

d - Bore	29.367 mm 1.1562 in

D - Cup Outer Diameter	66.421 mm 2.6150 in
B - Cone Width	25.433 mm 1.0013 in
C - Cup Width	19.050 mm 0.7500 in
T - Bearing Width	23.813 mm 0.9375 in

Abutment and Fillet Dimensions

R - Cone Backface "To Clear" Radius[1]	3.560 mm 0.14 in
r - Cup Backface "To Clear" Radius[2]	1.27 mm 0.050 in
da - Cone Frontface Backing Diameter	35.05 mm 1.38 in
db - Cone Backface Backing Diameter	40.89 mm 1.61 in
Da - Cup Frontface Backing Diameter	60.96 mm 2.40 in
Db - Cup Backface Backing Diameter	57.91 mm 2.28 in
Ab - Cage-Cone Frontface Clearance	1.5 mm 0.06 in
Aa - Cage-Cone Backface Clearance	0.3 mm 0.01 in
a - Effective Center Location[3]	-9.4 mm -0.37 in

Basic Load Ratings

C90 - Dynamic Radial Rating (90 million revolutions)[4]	19900 N 4470 lbf
C1 - Dynamic Radial Rating (1 million revolutions)[5]	76600 N 17200 lbf
C0 - Static Radial Rating	81700 N 18400 lbf
C_{a90} - Dynamic Thrust Rating (90 million revolutions)[6]	8640 N 1940 lbf

Factors

K - Factor[7]	2.3
e - ISO Factor[8]	0.25
Y - ISO Factor[9]	2.36
G1 - Heat Generation Factor (Roller-Raceway)	19.3
G2 - Heat Generation Factor (Rib-Roller End)	8
Cg - Geometry Factor	0.0598

[1] These maximum fillet radii will be cleared by the bearing corners.
[2] These maximum fillet radii will be cleared by the bearing corners.
[3] Negative value indicates effective center inside cone backface.
[4] Based on 90 x 10^6 revolutions L_{10} life, for The Timken Company life calculation method. C_{90} and C_{a90} are radial and thrust values.
[5] Based on 1 x 10^6 revolutions L_{10} life, for the ISO life calculation method.
[6] Based on 90 x 10^6 revolutions L_{10} life, for The Timken Company life calculation method. C_{90} and C_{a90} are radial and thrust values for a single-row, $C_{90(2)}$ is the two-row radial value.
[7] These factors apply for both inch and metric calculations. Consult your Timken representative for instruction on use.
[8] These factors apply for both inch and metric calculations. Consult your Timken representative for instruction on use.
[9] These factors apply for both inch and metric calculations. Consult your Timken representative for instruction on use.

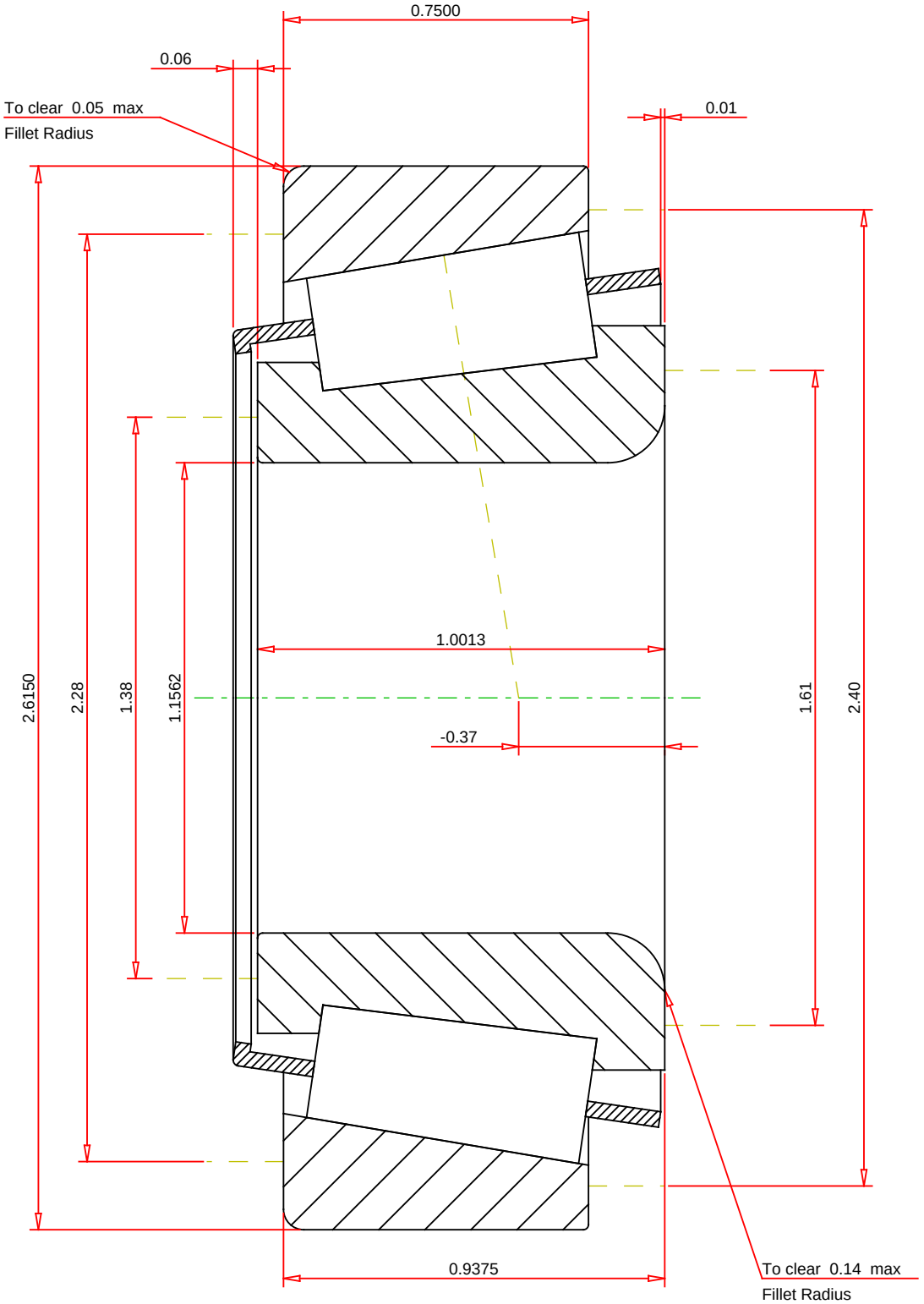

IMPERIAL UNITS

ISO Factor - e	0.25	
ISO Factor - Y	2.36	
Bearing Weight	0.9	lb
Number of Rollers Per Row	14	
Effective Center Location	-0.37	inch

TIMKEN

THE TIMKEN COMPANY
NORTH CANTON, OHIO USA

2690 - 2631
TS BEARING ASSEMBLY

K Factor	2.3	
Dynamic Radial Rating - C90	19900	lbf
Dynamic Thrust Rating - Ca90	8640	lbf
Static Radial Rating - C0	81700	lbf
Dynamic Radial Rating - C1	76600	lbf

Every reasonable effort has been made to ensure the accuracy of the information contained in this writing, but no liability is accepted for errors, omissions or for any other reason.

FOR DISCUSSION ONLY