The Timken Company
4500 Mt Pleasant St. NW
N. Canton, OH 44720
Phone: (234) 262-3000
E-Mail: CustomerCAD@timken.com • **Web site:** www.timken.com

Timken Part Number 1380 - 1328, Tapered Roller Bearings - TS (Tapered Single) Imperial

This is the most basic and most widely used type of tapered roller bearing. It consists of two main separable parts: the cone (inner ring) assembly and the cup (outer ring). It is typically mounted in opposing pairs on a shaft.



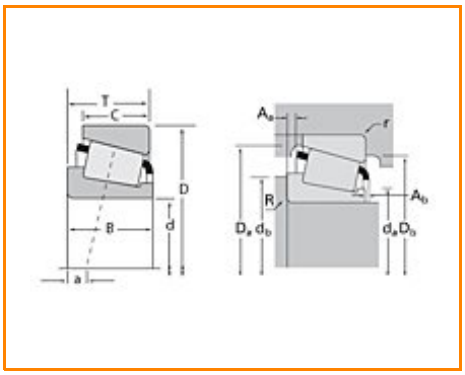

Specifications | Dimensions | Abutment and Fillet Dimensions | Basic Load Ratings | Factors

Specifications

Series	1300
Cone Part Number	1380
Cup Part Number	1328
Design Units	Imperial
Bearing Weight	0.200 Kg 0.4 lb
Cage Type	Stamped Steel

Dimensions

d - Bore	22.225 mm 0.8750 in

D - Cup Outer Diameter	52.388 mm 2.0625 in
B - Cone Width	20.168 mm 0.7940 in
C - Cup Width	14.288 mm 0.5625 in
T - Bearing Width	19.368 mm 0.7625 in

Abutment and Fillet Dimensions

R - Cone Backface "To Clear" Radius[1]	1.520 mm 0.06 in
r - Cup Backface "To Clear" Radius[2]	1.52 mm 0.06 in
da - Cone Frontface Backing Diameter	26.92 mm 1.06 in
db - Cone Backface Backing Diameter	29.46 mm 1.16 in
Da - Cup Frontface Backing Diameter	49.00 mm 1.93 in
Db - Cup Backface Backing Diameter	44.96 mm 1.77 in
Ab - Cage-Cone Frontface Clearance	1.8 mm 0.07 in
Aa - Cage-Cone Backface Clearance	0.8 mm 0.03 in
a - Effective Center Location[3]	-7.60 mm -0.3 in

Basic Load Ratings

C90 - Dynamic Radial Rating (90 million revolutions)[4]	12400 N 2790 lbf
C1 - Dynamic Radial Rating (1 million revolutions)[5]	47900 N 10800 lbf
C0 - Static Radial Rating	48300 N 10900 lbf
C_{a90} - Dynamic Thrust Rating (90 million revolutions)[6]	6200 N 1390 lbf

Factors

K - Factor[7]	2
e - ISO Factor[8]	0.29
Y - ISO Factor[9]	2.05
G1 - Heat Generation Factor (Roller-Raceway)	10.3
G2 - Heat Generation Factor (Rib-Roller End)	5.21
Cg - Geometry Factor	0.0508

[1] These maximum fillet radii will be cleared by the bearing corners.
[2] These maximum fillet radii will be cleared by the bearing corners.
[3] Negative value indicates effective center inside cone backface.
[4] Based on 90 x 10^6 revolutions L_{10} life, for The Timken Company life calculation method. C_{90} and C_{a90} are radial and thrust values.
[5] Based on 1 x 10^6 revolutions L_{10} life, for the ISO life calculation method.
[6] Based on 90 x 10^6 revolutions L_{10} life, for The Timken Company life calculation method. C_{90} and C_{a90} are radial and thrust values for a single-row, $C_{90(2)}$ is the two-row radial value.
[7] These factors apply for both inch and metric calculations. Consult your Timken representative for instruction on use.
[8] These factors apply for both inch and metric calculations. Consult your Timken representative for instruction on use.
[9] These factors apply for both inch and metric calculations. Consult your Timken representative for instruction on use.

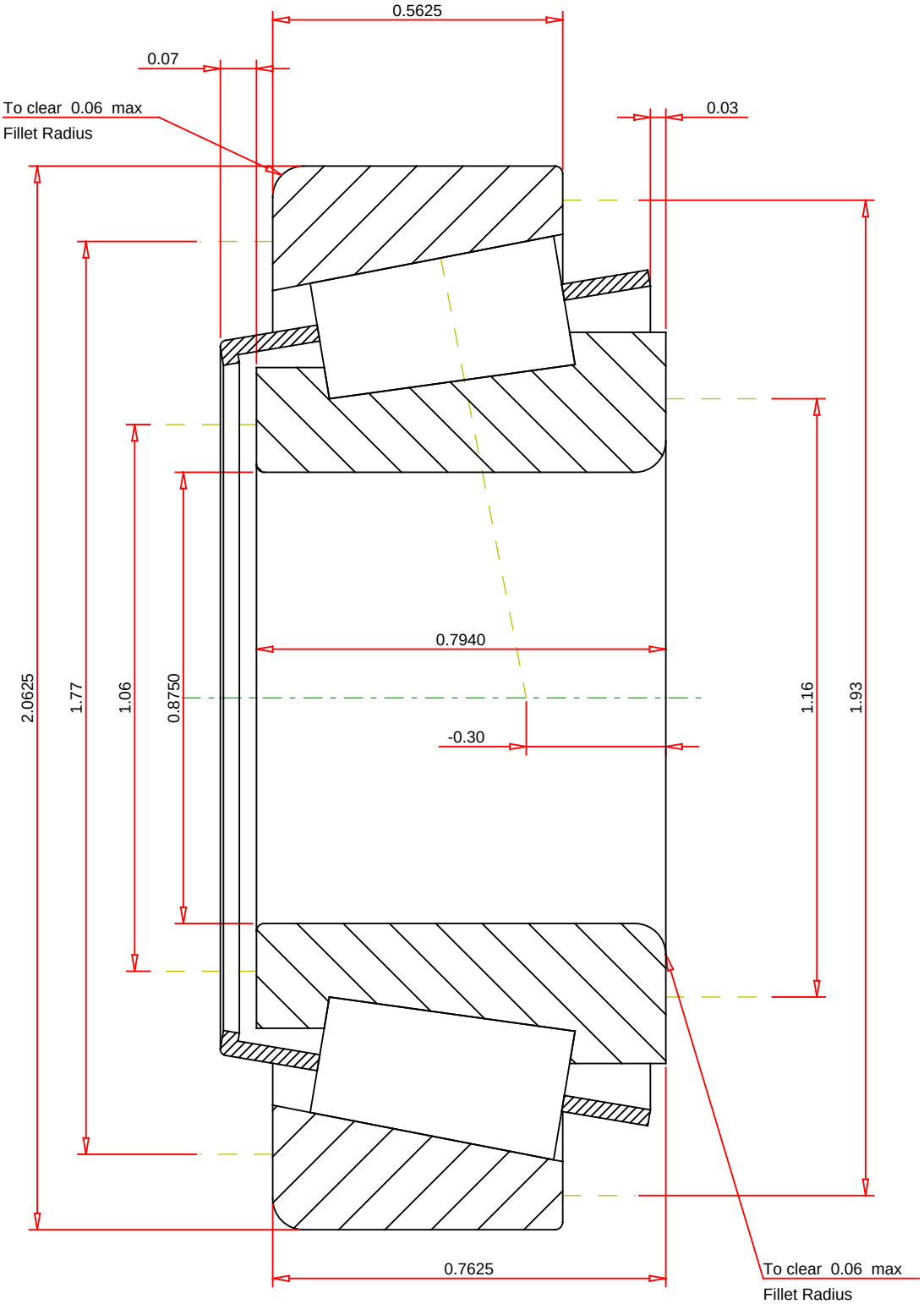

IMPERIAL UNITS

ISO Factor - e	0.29	
ISO Factor - Y	2.05	
Bearing Weight	0.4	lb
Number of Rollers Per Row	14	
Effective Center Location	-0.3	inch

TIMKEN®

THE TIMKEN COMPANY
NORTH CANTON, OHIO USA

1380 - 1328
TS BEARING ASSEMBLY

K Factor	2	
Dynamic Radial Rating - C90	12400	lbf
Dynamic Thrust Rating - Ca90	6200	lbf
Static Radial Rating - C0	48300	lbf
Dynamic Radial Rating - C1	47900	lbf

Every reasonable effort has been made to ensure the accuracy of the information contained in this writing, but no liability is accepted for errors, omissions or for any other reason.

FOR DISCUSSION ONLY