The Timken Company
4500 Mt Pleasant St. NW
N. Canton, OH 44720
Phone: (234) 262-3000
E-Mail: CustomerCAD@timken.com • **Web site:** www.timken.com

Timken Part Number GY1010KRRB, Fafnir® Setscrew Locking Ball Bearings



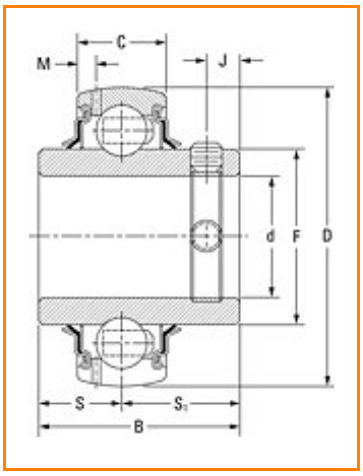

Specifications | Dimensions | Basic Load Ratings

Specifications

Bore Size d	5/8 in 15.9 mm
Bore Type	Cylindrical bore
Bearing Type	Ball Bearing
Seal Type	Shroud Seal
Material	Bearing Steel
Lubrication Type	Relubricatable
O.D. Type	Spherical OD
Dimension M	0.107 in 2.72 mm
Series	Industrial

Weight	0.500 lb 0.200 Kg
Sub Series	GY…KRRB

Dimensions

Outside Diameter D	1.575 in 40.000 mm
Inside Ring Width B	27.38 mm 1.078 in
Outside Ring Width C	12.000 mm 0.472 in
Radius r	0.6 mm 0.024 in
Center of Bearing from End S	11.5 mm 0.453 in
Dimension S1	15.88 mm 0.625 in
Set Screw Distance S2	4.55 mm 0.179 in
Set Screw Size	M5X.8
Number of Set Screws	2
Angle between Set Screws	90 º

Basic Load Ratings

Static Load Rating	1000 lbf 4400 N
Dynamic Load Rating	2360 lbf 10600 N

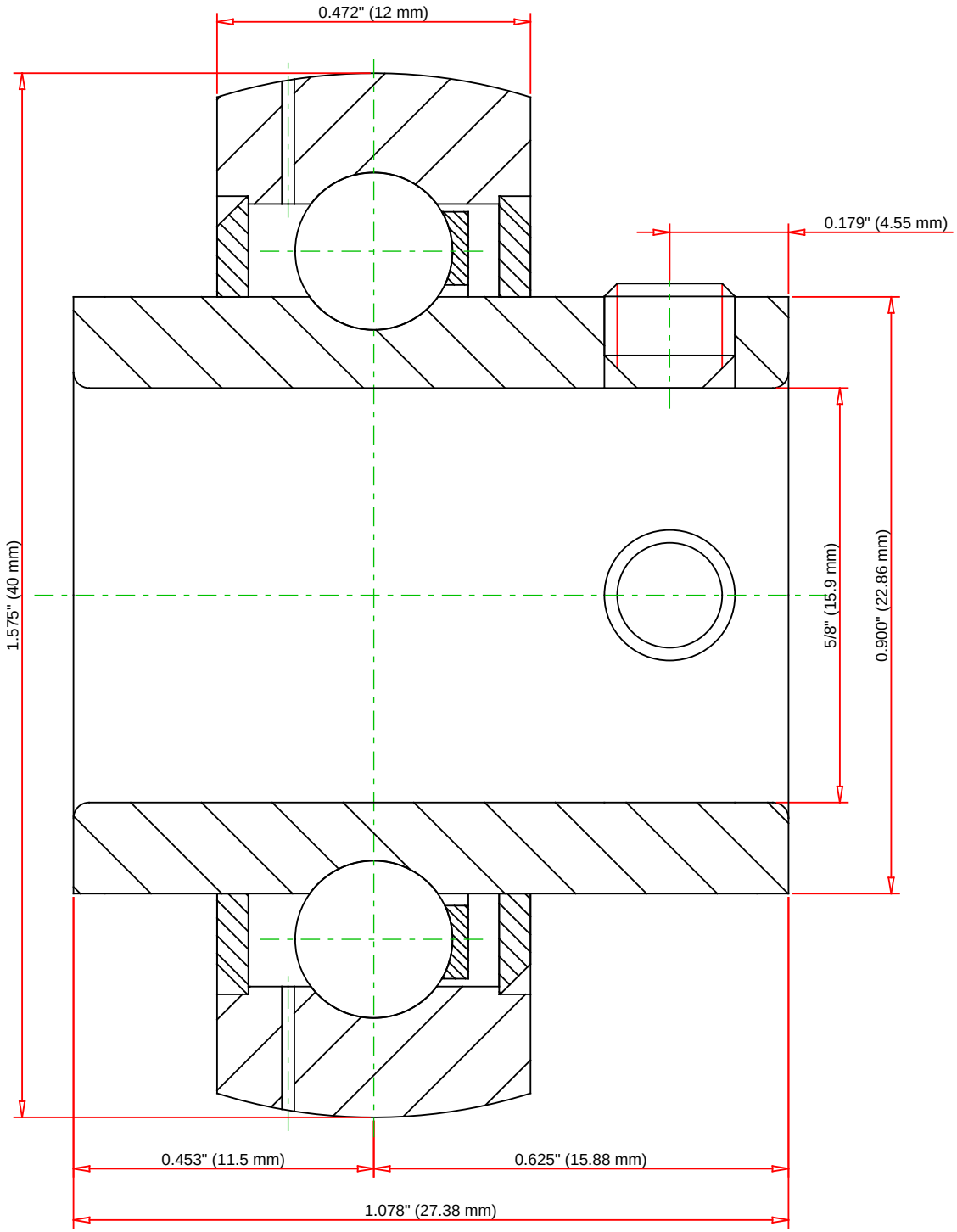

Weight	0.5 lb	0.2 kg

TIMKEN®

THE TIMKEN COMPANY
NORTH CANTON, OHIO USA

GY1010KRRB

Fafnir® Setscrew Locking Ball Bearings

Basic Load Ratings - C_r	2360 lbf	10600 N
Load Ratings - C_{0r}	1000 lbf	4400 N

Every reasonable effort has been made to ensure the accuracy of the information contained in this writing, but no liability is accepted for errors, omissions or for any other reason.

FOR DISCUSSION ONLY