The Timken Company
4500 Mt Pleasant St. NW
N. Canton, OH 44720
Phone: (234) 262-3000
E-Mail: CustomerCAD@timken.com • **Web site:** www.timken.com

Timken Part Number OH3152H, Metric OH Hydraulic Adapter Sleeve

- Includes sleeve, hydraulic nut and lockwasher or lockplate.
- Hydraulic assistance facilitates mounting of large bearing. Oil pump required to inject pressurized oil.
- Other dimensions may be available, consult your Timken sales representative.

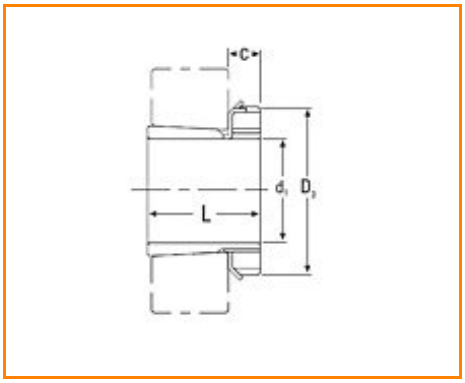

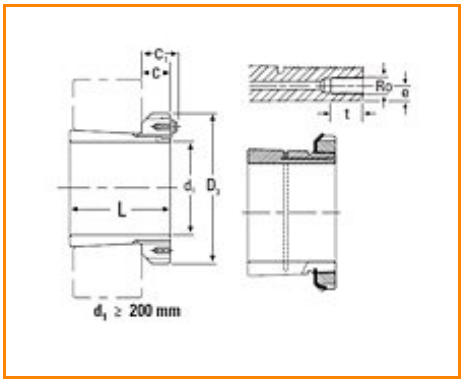

Specifications

d1	240.00 mm
L[1]	190.00 mm
C	39.0 mm
G	Tr260x4
D_3	330 mm
Ro	M6
Locknut	HM52T
Lockwasher and Lockplates	MB52
Appropriate Hydraulic Nut	HMV52

[1] Tolerance -0 to + 0.4 mm (-0 to +1/64 in)