**The Timken Company**
4500 Mt Pleasant St. NW
N. Canton, OH 44720
**Phone:** (234) 262-3000
**E-Mail:** CustomerCAD@timken.com • **Web site:** www.timken.com

# Timken Part Number YCJ 1 11/16 SGT, Four-Bolt Flanged Units Setscrew Locking (Includes Industrial and Standard Series)



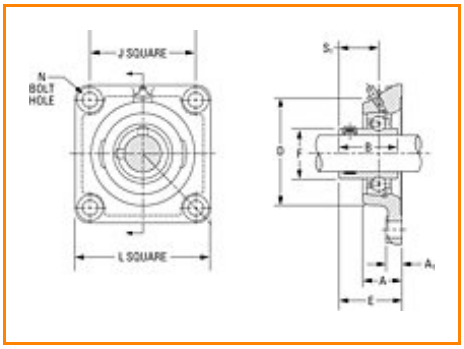


Specifications | Dimensions | Basic Load Ratings

## Specifications

| | |
|---|---|
| **Bore Size d** | 1 11/16 in<br>42.9 mm |
| **Bearing Number** | GY1111KRRB SGT |
| **Dimension D** | 4.126 in<br>104.8 mm |
| **Dimension E** | 2.186 in<br>55.52 mm |
| **Inside Ring Outside Diameter** | 2.280 in<br>57.92 mm |
| **Series** | Industrial |
| **Weight** | 5.24 lb<br>2.38 Kg |

| | |
|---|---|
| **Seal Type** | Shroud Seal |

## Dimensions

| | |
|---|---|
| **Total Length L** | 136.5 mm<br>5.374 in |
| **Total Width A** | 1.531 in<br>38.9 mm |
| **Bolt Hole Size N** | 12 mm<br>0.472 in |
| **Flange Thickness A1** | 14.3 mm<br>0.563 in |
| **Center of Bearing from Housing End A2** | 24.12 mm<br>0.950 in |
| **Inside Ring Width B** | N/A |
| **Total Height** | 136.5 mm<br>5.374 in |
| **Bolt Size** | M12 |
| **Center of Bearing from Bearing End S** | 19 mm<br>0.748 in |

## Basic Load Ratings

| | |
|---|---|
| **Static Load Rating** | 4500 lbf<br>20000 N |
| **Dynamic Load Rating** | 8150 lbf<br>36000 N |

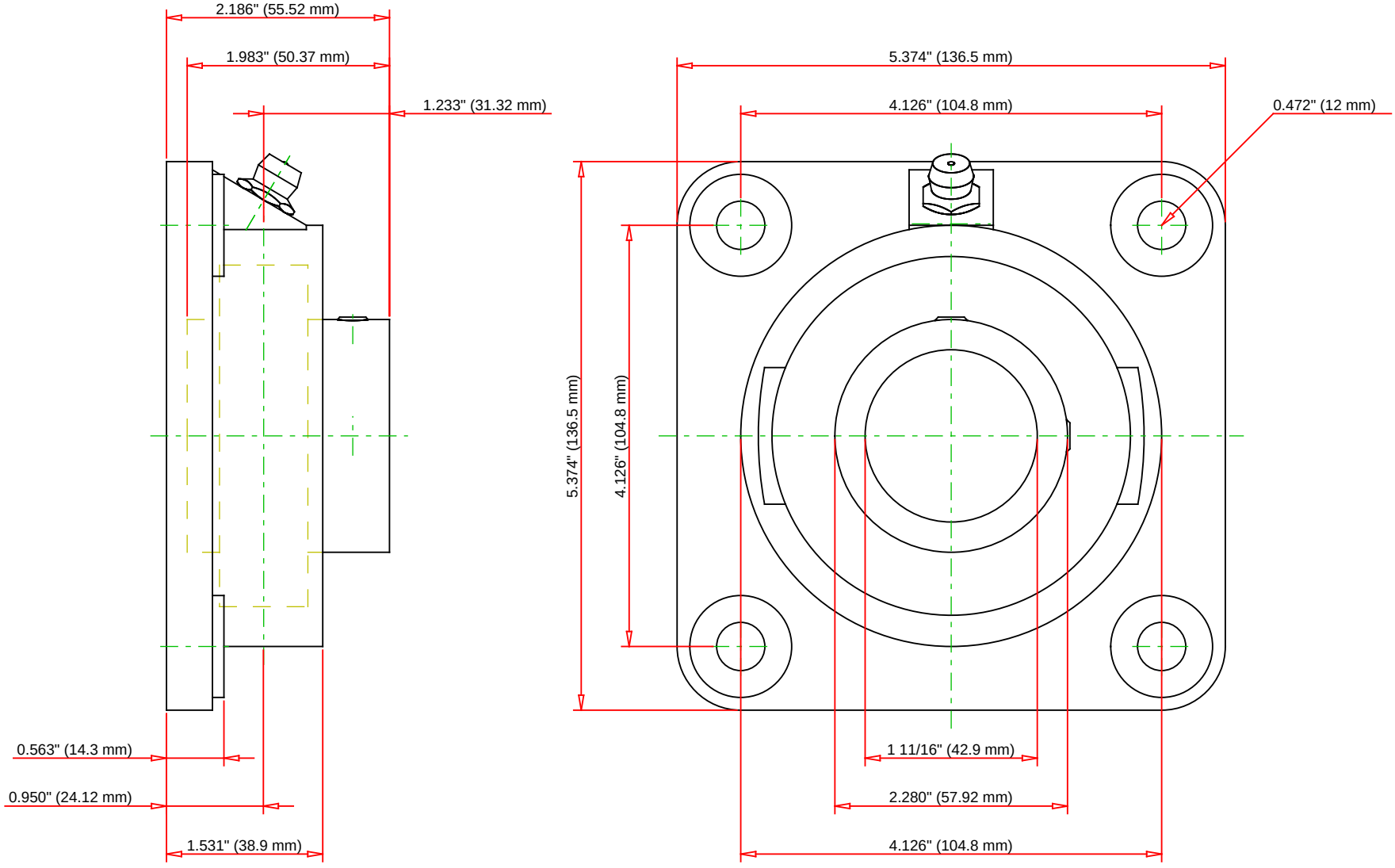


| | | | | |
|---|---|---|---|---|
| Bearing Number | GY1111KRRB SGT | | | |
| Load Ratings - $C_r$ | 8150 | lbf | 36000 | N |
| Load Ratings - $C_{0r}$ | 4500 | lbf | 20000 | N |
| Weight | 0 | lb | 0 | kg |
| Bolt Size | M8x1.25 | | | |

TIMKEN

THE TIMKEN COMPANY
NORTH CANTON, OHIO USA

# YCJ 1 11/16 SGT

Four-Bolt Flanged Units Setscrew Locking
(Includes Industrial and Standard Series)

Every reasonable effort has been made to ensure the accuracy of the information contained in this writing, but no liability is accepted for errors, omissions or for any other reason.

FOR DISCUSSION ONLY