The Timken Company
4500 Mt Pleasant St. NW
N. Canton, OH 44720
Phone: (234) 262-3000
E-Mail: CustomerCAD@timken.com • **Web site:** www.timken.com

Timken Part Number GRA100RRB, Fafnir® Eccentric Locking Collar Ball Bearings



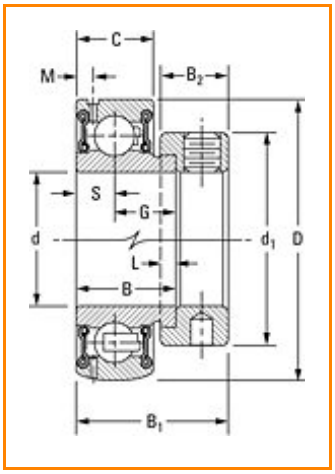

Specifications | Dimensions | Basic Load Ratings

Specifications

Bore Size d	1 in 25.4 mm
Bore Type	Cylindrical bore
Bearing Type	Ball Bearing
Seal Type	Molded Shroud
Material	Bearing Steel
Lubrication Type	Relubricatable
O.D. Type	Spherical OD
Dimension M	0.142 in 3.61 mm
Dimension B1	1.220 in 31 mm

Dimension B2	0.531 in 13.5 mm
Series	Standard
Weight	0.500 lb 0.200 Kg
Sub Series	GRA..RRB

Dimensions

Outside Diameter D	2.047 in 52.000 mm
Inside Ring Width B	21.44 mm 0.844 in
Outside Ring Width C	15.000 mm 0.591 in
Radius r	0.6 mm 0.024 in
Center of Bearing from End S	7.49 mm 0.295 in
Dimension S1	23.51 mm 0.926 in
Set Screw Size	1/4-20
Number of Set Screws	2
Angle between Set Screws	90 º

Basic Load Ratings

Static Load Rating	1730 lbf 7700 N

Dynamic Load Rating	3550 lbf 15800 N

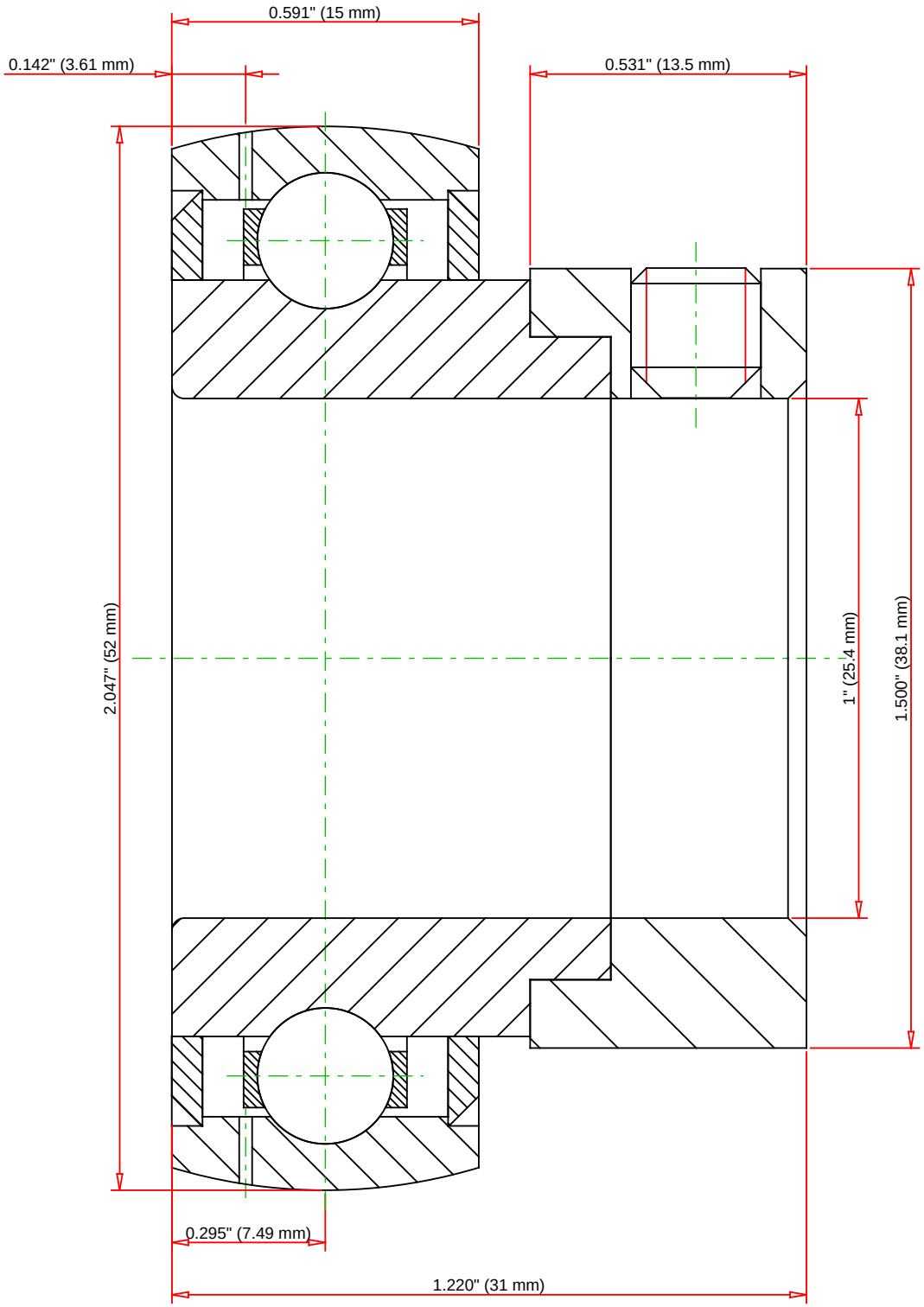

Weight	0.5 lb	0.2 kg

TIMKEN®

THE TIMKEN COMPANY
NORTH CANTON, OHIO USA

GRA100RRB

Fafnir® Eccentric Locking Collar Ball Bearings

Basic Load Ratings - C_r	3550 lbf	15800 N
Load Ratings - C_{0r}	1730 lbf	7700 N

Every reasonable effort has been made to ensure the accuracy of the information contained in this writing, but no liability is accepted for errors, omissions or for any other reason.

FOR DISCUSSION ONLY