The Timken Company
4500 Mt Pleasant St. NW
N. Canton, OH 44720
Phone: (234) 262-3000
E-Mail: CustomerCAD@timken.com • **Web site:** www.timken.com

Timken Part Number SK-17023, Push-Type Removable Sleeve, Locknut and Lockwasher

The chart below shows dimensions for adapter assemblies and components used in the tapered bore bearings on shafts.

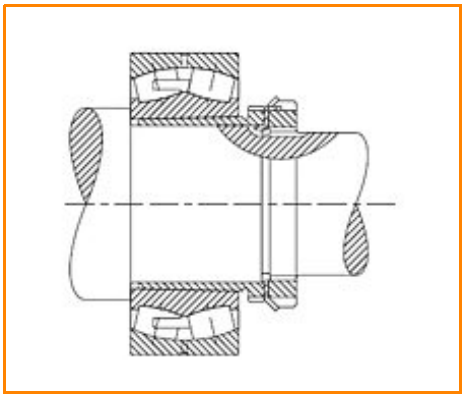

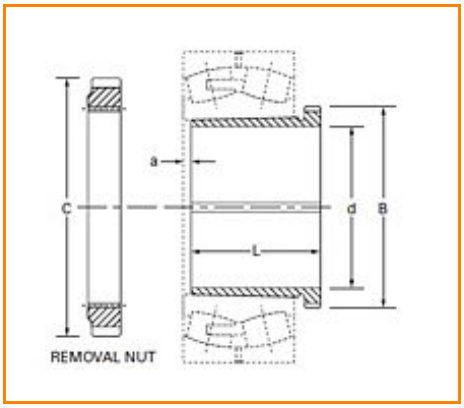

Specifications | Shaft Dimensions | Adapter Dimensions | Accessory Numbers

Specifications

Series	223K
Removal Nut O.D. C	234.95 mm 9.250 in
Bearing Number	22334K
Sleeve Weight	17.2 lb 7.8 Kg

Shaft Dimensions

Diameter d	150 mm 5.9055 in
Tolerance[1]	-0.13 mm -0.005 in

Adapter Dimensions

Pitch Diameter B	184.07 mm 7.247 in
L[2]	146.00 mm 5.7480 in
a	6.00 mm 0.236 in

Accessory Numbers

Sleeve	SK-17023
Locknut	AN-30
Lockwasher and Lockplates	W-30
Removal Nut	RN-34

[1] Tolerance range is from +0 to value listed.
[2] Tolerance -0 to + 0.4 mm (-0 to +1/64 in)