The Timken Company
4500 Mt Pleasant St. NW
N. Canton, OH 44720
Phone: (234) 262-3000
E-Mail: CustomerCAD@timken.com • **Web site:** www.timken.com

Timken Part Number GRA010RRB, Fafnir® Eccentric Locking Collar Ball Bearings



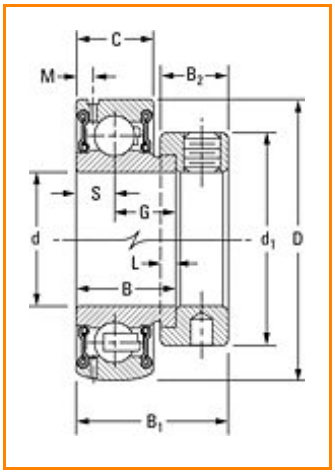

Specifications | Dimensions | Basic Load Ratings

Specifications

Bore Size d	5/8 in 15.9 mm
Bore Type	Cylindrical bore
Bearing Type	Ball Bearing
Seal Type	Molded Shroud
Material	Bearing Steel
Lubrication Type	Relubricatable
O.D. Type	Spherical OD
Dimension M	0.107 in 2.72 mm
Dimension B1	1.126 in 28.6 mm

Dimension B2	0.531 in 13.5 mm
Series	Standard
Weight	0.500 lb 0.200 Kg
Sub Series	GRA..RRB

Dimensions

Outside Diameter D	1.575 in 40.000 mm
Inside Ring Width B	19.05 mm 0.750 in
Outside Ring Width C	13.000 mm 0.512 in
Radius r	0.6 mm 0.024 in
Center of Bearing from End S	6.5 mm 0.256 in
Dimension S1	22.1 mm 0.870 in
Set Screw Size	1/4-20
Number of Set Screws	2
Angle between Set Screws	90 º

Basic Load Ratings

Static Load Rating	1060 lbf 4700 N

Dynamic Load Rating	2360 lbf 10600 N

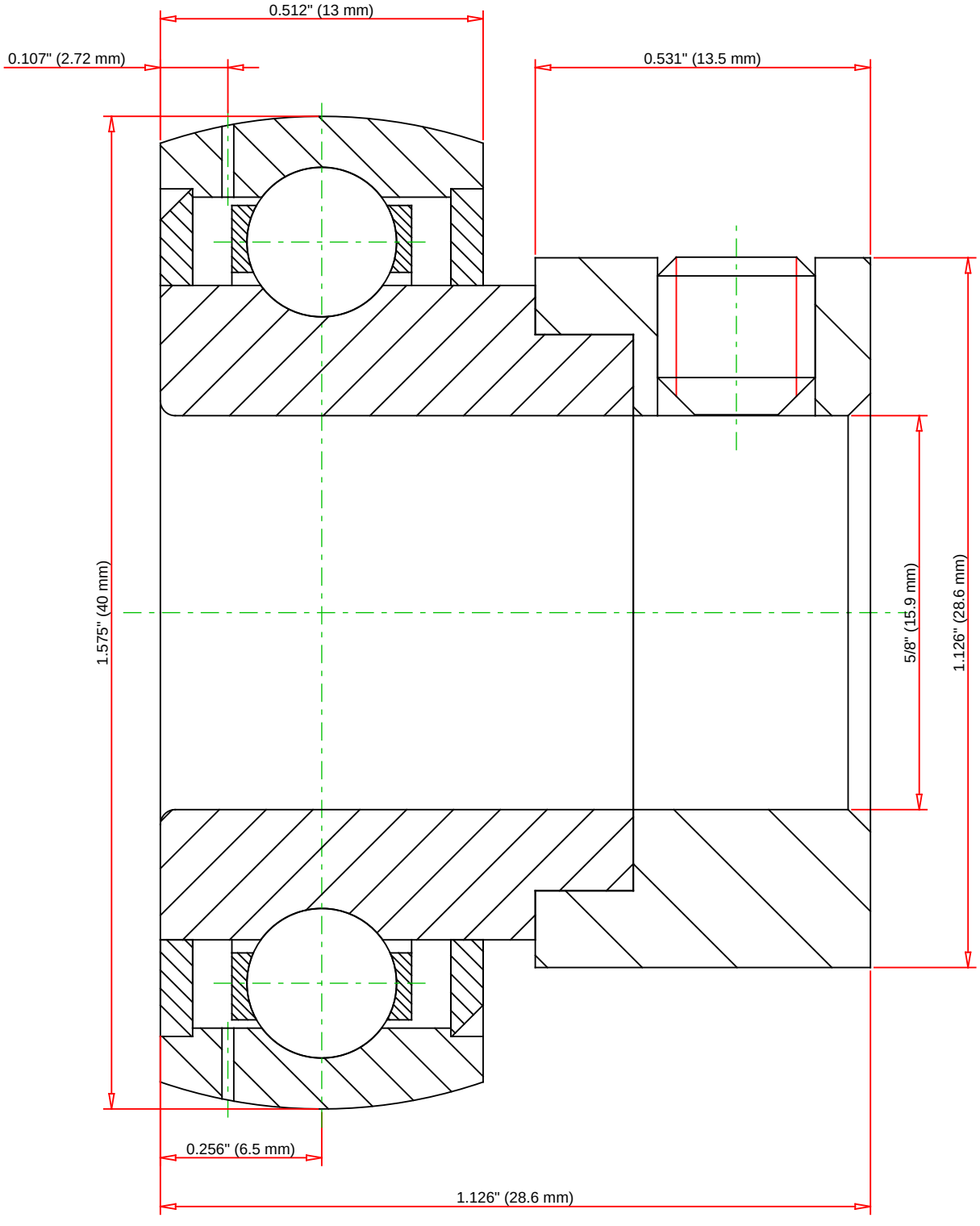

Weight	0.5 lb	0.2 kg

TIMKEN®

THE TIMKEN COMPANY
NORTH CANTON, OHIO USA

GRA010RRB

Fafnir® Eccentric Locking Collar Ball Bearings

Basic Load Ratings - C_r	2360 lbf	10600 N
Load Ratings - C_{0r}	1060 lbf	4700 N

Every reasonable effort has been made to ensure the accuracy of the information contained in this writing, but no liability is accepted for errors, omissions or for any other reason.

FOR DISCUSSION ONLY