The Timken Company
4500 Mt Pleasant St. NW
N. Canton, OH 44720
Phone: (234) 262-3000
E-Mail: CustomerCAD@timken.com • **Web site:** www.timken.com

Timken Part Number 495-S - 493, Tapered Roller Bearings - TS (Tapered Single) Imperial

This is the most basic and most widely used type of tapered roller bearing. It consists of two main separable parts: the cone (inner ring) assembly and the cup (outer ring). It is typically mounted in opposing pairs on a shaft.

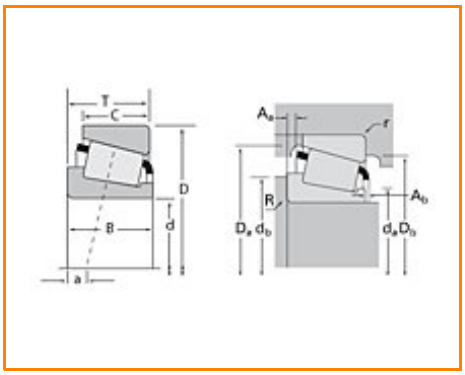

Specifications | Dimensions | Abutment and Fillet Dimensions | Basic Load Ratings | Factors

Specifications

Series	495
Cone Part Number	495-S
Cup Part Number	493
Design Units	Imperial
Bearing Weight	1.900 Kg 4.20 lb
Cage Type	Stamped Steel

Dimensions

d - Bore	71.438 mm 2.8125 in

D - Cup Outer Diameter	136.525 mm 5.3750 in
B - Cone Width	29.769 mm 1.1720 in
C - Cup Width	22.225 mm 0.8750 in
T - Bearing Width	30.163 mm 1.1875 in

Abutment and Fillet Dimensions

R - Cone Backface "To Clear" Radius[1]	3.560 mm 0.14 in
r - Cup Backface "To Clear" Radius[2]	3.30 mm 0.130 in
da - Cone Frontface Backing Diameter	82.04 mm 3.94 in
db - Cone Backface Backing Diameter	87.88 mm 3.46 in
Da - Cup Frontface Backing Diameter	131.06 mm 5.16 in
Db - Cup Backface Backing Diameter	121.92 mm 4.80 in
Ab - Cage-Cone Frontface Clearance	3 mm 0.12 in
Aa - Cage-Cone Backface Clearance	1.8 mm 0.07 in
a - Effective Center Location[3]	-0.8 mm -0.03 in

Basic Load Ratings

C90 - Dynamic Radial Rating (90 million revolutions)[4]	40000 N 9000 lbf
C1 - Dynamic Radial Rating (1 million revolutions)[5]	154000 N 34700 lbf
C0 - Static Radial Rating	216000 N 48600 lbf
C_{a90} - Dynamic Thrust Rating (90 million revolutions)[6]	30500 N 6850 lbf

Factors

K - Factor[7]	1.31
e - ISO Factor[8]	0.44
Y - ISO Factor[9]	1.35
G1 - Heat Generation Factor (Roller-Raceway)	105
G2 - Heat Generation Factor (Rib-Roller End)	29.3
Cg - Geometry Factor	0.125

[1] These maximum fillet radii will be cleared by the bearing corners.
[2] These maximum fillet radii will be cleared by the bearing corners.
[3] Negative value indicates effective center inside cone backface.
[4] Based on 90 x 10^6 revolutions L_{10} life, for The Timken Company life calculation method. C_{90} and C_{a90} are radial and thrust values.
[5] Based on 1 x 10^6 revolutions L_{10} life, for the ISO life calculation method.
[6] Based on 90 x 10^6 revolutions L_{10} life, for The Timken Company life calculation method. C_{90} and C_{a90} are radial and thrust values for a single-row, $C_{90(2)}$ is the two-row radial value.
[7] These factors apply for both inch and metric calculations. Consult your Timken representative for instruction on use.
[8] These factors apply for both inch and metric calculations. Consult your Timken representative for instruction on use.
[9] These factors apply for both inch and metric calculations. Consult your Timken representative for instruction on use.

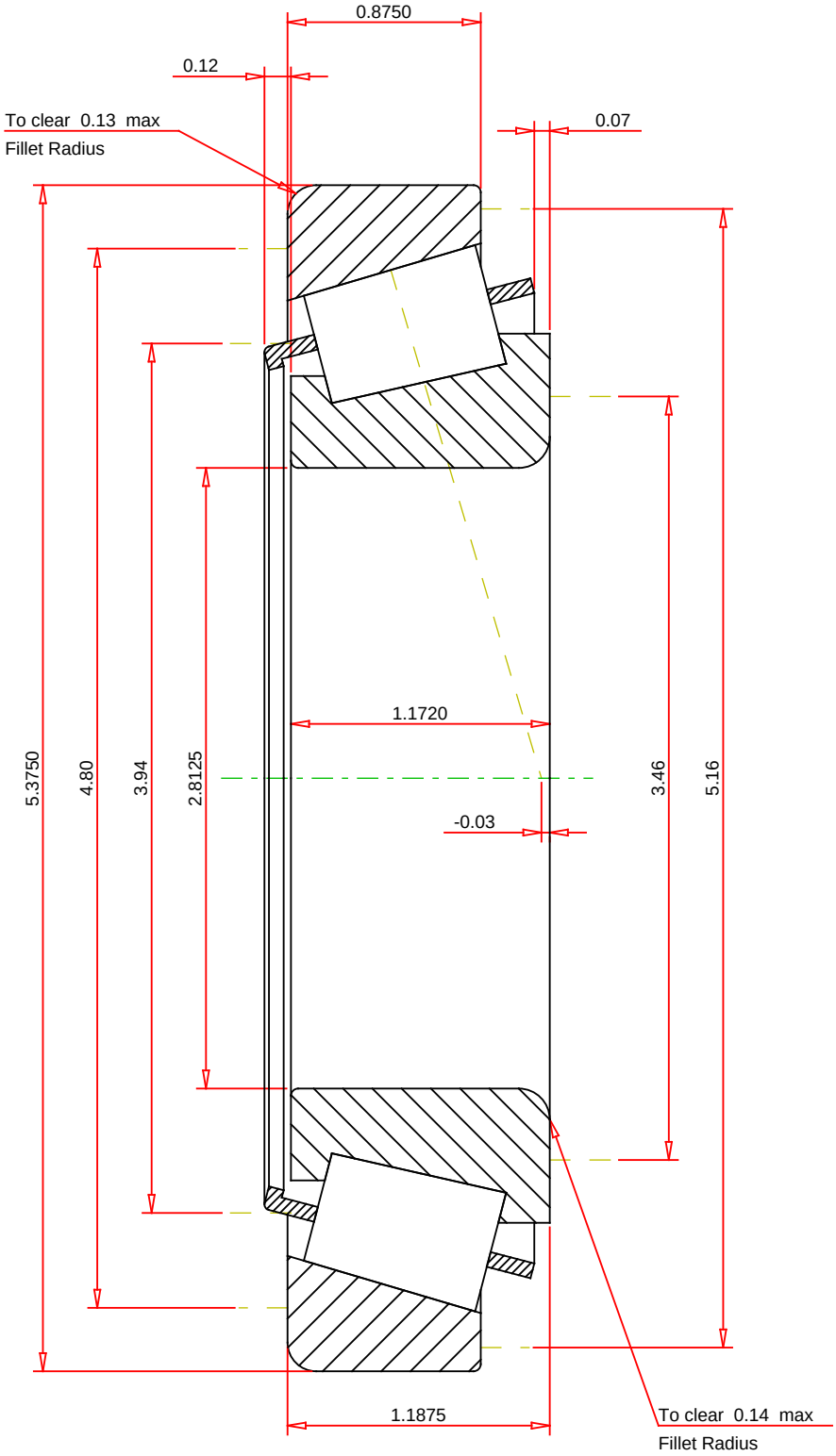

IMPERIAL UNITS

ISO Factor - e	0.44	
ISO Factor - Y	1.35	
Bearing Weight	4.2	lb
Number of Rollers Per Row	23	
Effective Center Location	-0.03	inch

TIMKEN®

THE TIMKEN COMPANY
NORTH CANTON, OHIO USA

495-S - 493
TS BEARING ASSEMBLY

K Factor	1.31	
Dynamic Radial Rating - C90	40000	lbf
Dynamic Thrust Rating - Ca90	30500	lbf
Static Radial Rating - C0	216000	lbf
Dynamic Radial Rating - C1	154000	lbf

FOR DISCUSSION ONLY