The Timken Company
4500 Mt Pleasant St. NW
N. Canton, OH 44720
Phone: (234) 262-3000
E-Mail: CustomerCAD@timken.com • **Web site:** www.timken.com

Timken Part Number H924045 - H924010, Tapered Roller Bearings - TS (Tapered Single) Imperial

This is the most basic and most widely used type of tapered roller bearing. It consists of two main separable parts: the cone (inner ring) assembly and the cup (outer ring). It is typically mounted in opposing pairs on a shaft.



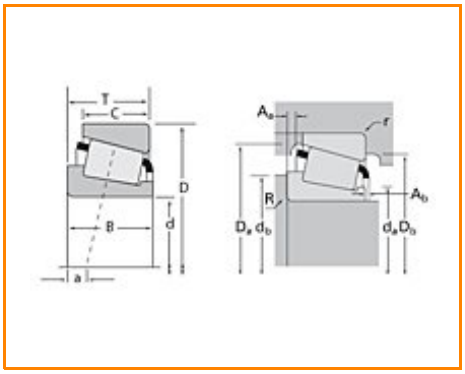

Specifications | Dimensions | Abutment and Fillet Dimensions | Basic Load Ratings | Factors

Specifications

Series	H924000
Cone Part Number	H924045
Cup Part Number	H924010
Design Units	Imperial
Bearing Weight	8.30 Kg 18.300 lb
Cage Type	Stamped Steel

Dimensions

d - Bore	111.125 mm 4.3750 in
D - Cup Outer Diameter	214.313 mm 8.4375 in
B - Cone Width	52.388 mm 2.0625 in
C - Cup Width	39.688 mm 1.5625 in
T - Bearing Width	55.563 mm 2.1875 in

Abutment and Fillet Dimensions

R - Cone Backface "To Clear" Radius[1]	3.560 mm 0.14 in
r - Cup Backface "To Clear" Radius[2]	3.30 mm 0.130 in
da - Cone Frontface Backing Diameter	131.06 mm 6.14 in
db - Cone Backface Backing Diameter	138.94 mm 5.47 in
Da - Cup Frontface Backing Diameter	205.00 mm 8.11 in
Db - Cup Backface Backing Diameter	185.93 mm 7.32 in
Ab - Cage-Cone Frontface Clearance	4.3 mm 0.17 in
Aa - Cage-Cone Backface Clearance	5.8 mm 0.23 in
a - Effective Center Location[3]	6.9 mm 0.27 in

Basic Load Ratings

C90 - Dynamic Radial Rating (90 million revolutions)[4]	144000 N 32500 lbf
C1 - Dynamic Radial Rating (1 million revolutions)[5]	557000 N 125000 lbf
C0 - Static Radial Rating	610000 N 137000 lbf
C_{a90} - Dynamic Thrust Rating (90 million revolutions)[6]	167000 N 37500 lbf

Factors

K - Factor[7]	0.87
e - ISO Factor[8]	0.67
Y - ISO Factor[9]	0.89
G1 - Heat Generation Factor (Roller-Raceway)	246
G2 - Heat Generation Factor (Rib-Roller End)	32.2
Cg - Geometry Factor	0.13

[1] These maximum fillet radii will be cleared by the bearing corners.

[2] These maximum fillet radii will be cleared by the bearing corners.

[3] Negative value indicates effective center inside cone backface.

[4] Based on 90 x 10^6 revolutions L_{10} life, for The Timken Company life calculation method. C_{90} and C_{a90} are radial and thrust values.

[5] Based on 1 x 10^6 revolutions L_{10} life, for the ISO life calculation method.

[6] Based on 90 x 10^6 revolutions L_{10} life, for The Timken Company life calculation method. C_{90} and C_{a90} are radial and thrust values for a single-row, $C_{90(2)}$ is the two-row radial value.

[7] These factors apply for both inch and metric calculations. Consult your Timken representative for instruction on use.

[8] These factors apply for both inch and metric calculations. Consult your Timken representative for instruction

on use.

[9] These factors apply for both inch and metric calculations. Consult your Timken representative for instruction on use.

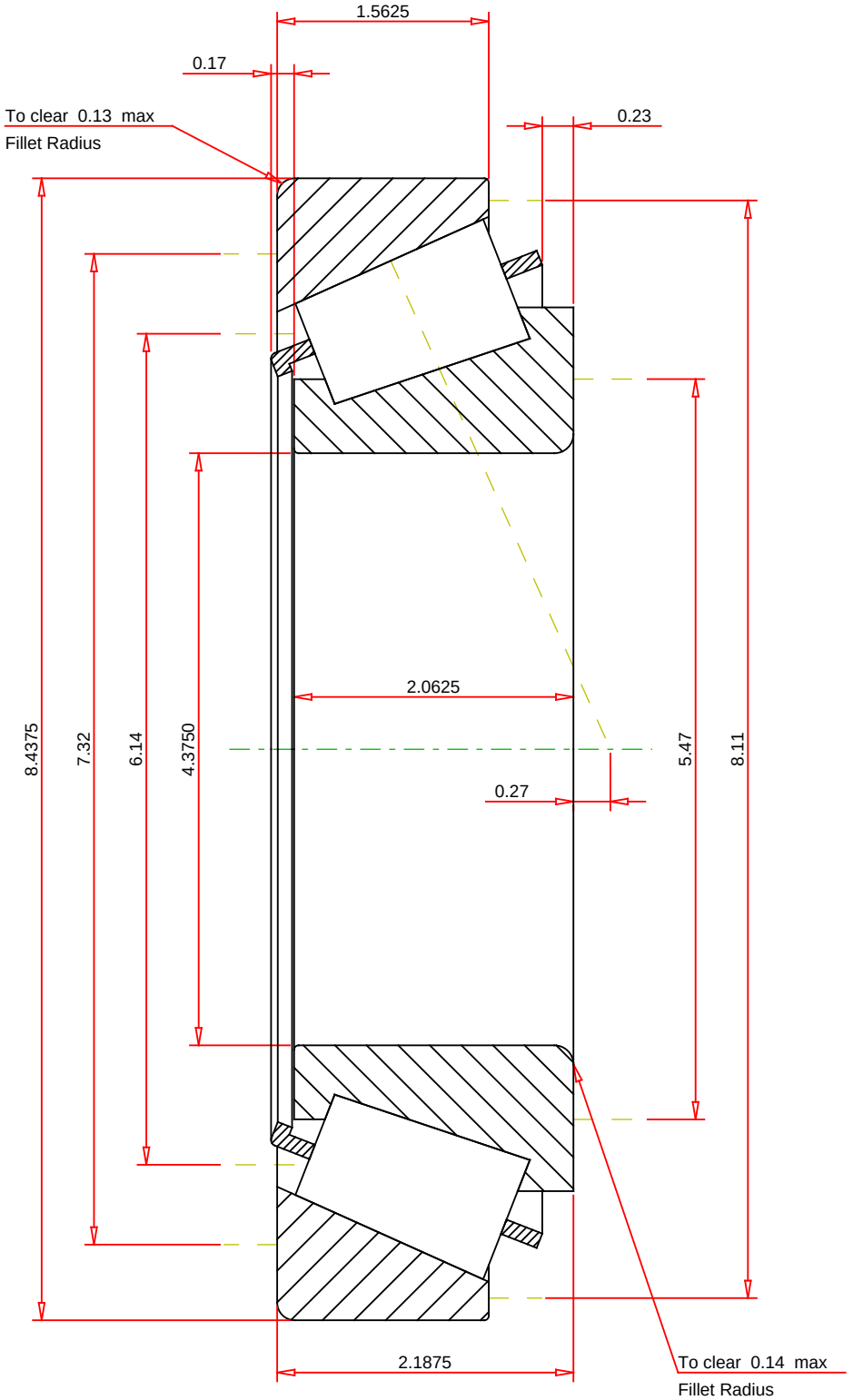

IMPERIAL UNITS

ISO Factor - e	0.67	
ISO Factor - Y	0.89	
Bearing Weight	18.3	lb
Number of Rollers Per Row	18	
Effective Center Location	0.27	inch

TIMKEN

THE TIMKEN COMPANY
NORTH CANTON, OHIO USA

H924045 - H924010
TS BEARING ASSEMBLY

K Factor	0.87	
Dynamic Radial Rating - C90	144000	lbf
Dynamic Thrust Rating - Ca90	167000	lbf
Static Radial Rating - C0	610000	lbf
Dynamic Radial Rating - C1	557000	lbf

Every reasonable effort has been made to ensure the accuracy of the information contained in this writing, but no liability is accepted for errors, omissions or for any other reason.

FOR DISCUSSION ONLY