The Timken Company
4500 Mt Pleasant St. NW
N. Canton, OH 44720
Phone: (234) 262-3000
E-Mail: CustomerCAD@timken.com • **Web site:** www.timken.com

Timken Part Number L812148 - L812111, Tapered Roller Bearings - TS (Tapered Single) Imperial

This is the most basic and most widely used type of tapered roller bearing. It consists of two main separable parts: the cone (inner ring) assembly and the cup (outer ring). It is typically mounted in opposing pairs on a shaft.



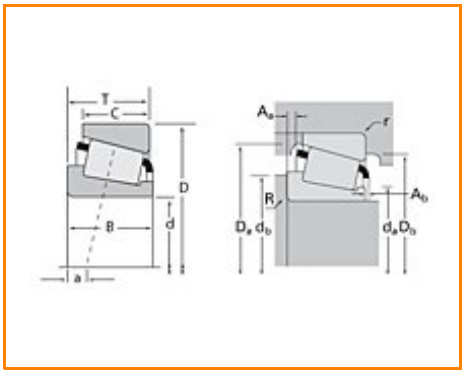

Specifications | Dimensions | Abutment and Fillet Dimensions | Basic Load Ratings | Factors

Specifications

Series	L812100
Cone Part Number	L812148
Cup Part Number	L812111
Design Units	Imperial
Bearing Weight	0.500 Kg 1.10 lb
Cage Type	Stamped Steel

Dimensions

d - Bore	66.675 mm 2.6250 in
D - Cup Outer Diameter	103.213 mm 4.0635 in
B - Cone Width	17.602 mm 0.6930 in
C - Cup Width	11.989 mm 0.4720 in
T - Bearing Width	17.602 mm 0.6930 in

Abutment and Fillet Dimensions

R - Cone Backface "To Clear" Radius[1]	1.520 mm 0.06 in
r - Cup Backface "To Clear" Radius[2]	0.76 mm 0.030 in
da - Cone Frontface Backing Diameter	71.88 mm 3.50 in
db - Cone Backface Backing Diameter	74.93 mm 2.95 in
Da - Cup Frontface Backing Diameter	99.10 mm 3.94 in
Db - Cup Backface Backing Diameter	96.01 mm 3.78 in
Ab - Cage-Cone Frontface Clearance	2 mm 0.08 in
Aa - Cage-Cone Backface Clearance	1.3 mm 0.05 in
a - Effective Center Location[3]	3.6 mm 0.14 in

Basic Load Ratings

C90 - Dynamic Radial Rating (90 million revolutions)[4]	21500 N 4830 lbf
C1 - Dynamic Radial Rating (1 million revolutions)[5]	82900 N 18600 lbf
C0 - Static Radial Rating	89100 N 20000 lbf
C_{a90} - Dynamic Thrust Rating (90 million revolutions)[6]	17900 N 4030 lbf

Factors

K - Factor[7]	1.2
e - ISO Factor[8]	0.49
Y - ISO Factor[9]	1.23
G1 - Heat Generation Factor (Roller-Raceway)	43.5
G2 - Heat Generation Factor (Rib-Roller End)	26.8
Cg - Geometry Factor	0.0958

[1] These maximum fillet radii will be cleared by the bearing corners.

[2] These maximum fillet radii will be cleared by the bearing corners.

[3] Negative value indicates effective center inside cone backface.

[4] Based on 90 x 10^6 revolutions L_{10} life, for The Timken Company life calculation method. C_{90} and C_{a90} are radial and thrust values.

[5] Based on 1 x 10^6 revolutions L_{10} life, for the ISO life calculation method.

[6] Based on 90 x 10^6 revolutions L_{10} life, for The Timken Company life calculation method. C_{90} and C_{a90} are radial and thrust values for a single-row, $C_{90(2)}$ is the two-row radial value.

[7] These factors apply for both inch and metric calculations. Consult your Timken representative for instruction on use.

[8] These factors apply for both inch and metric calculations. Consult your Timken representative for instruction

on use.

[9] These factors apply for both inch and metric calculations. Consult your Timken representative for instruction on use.

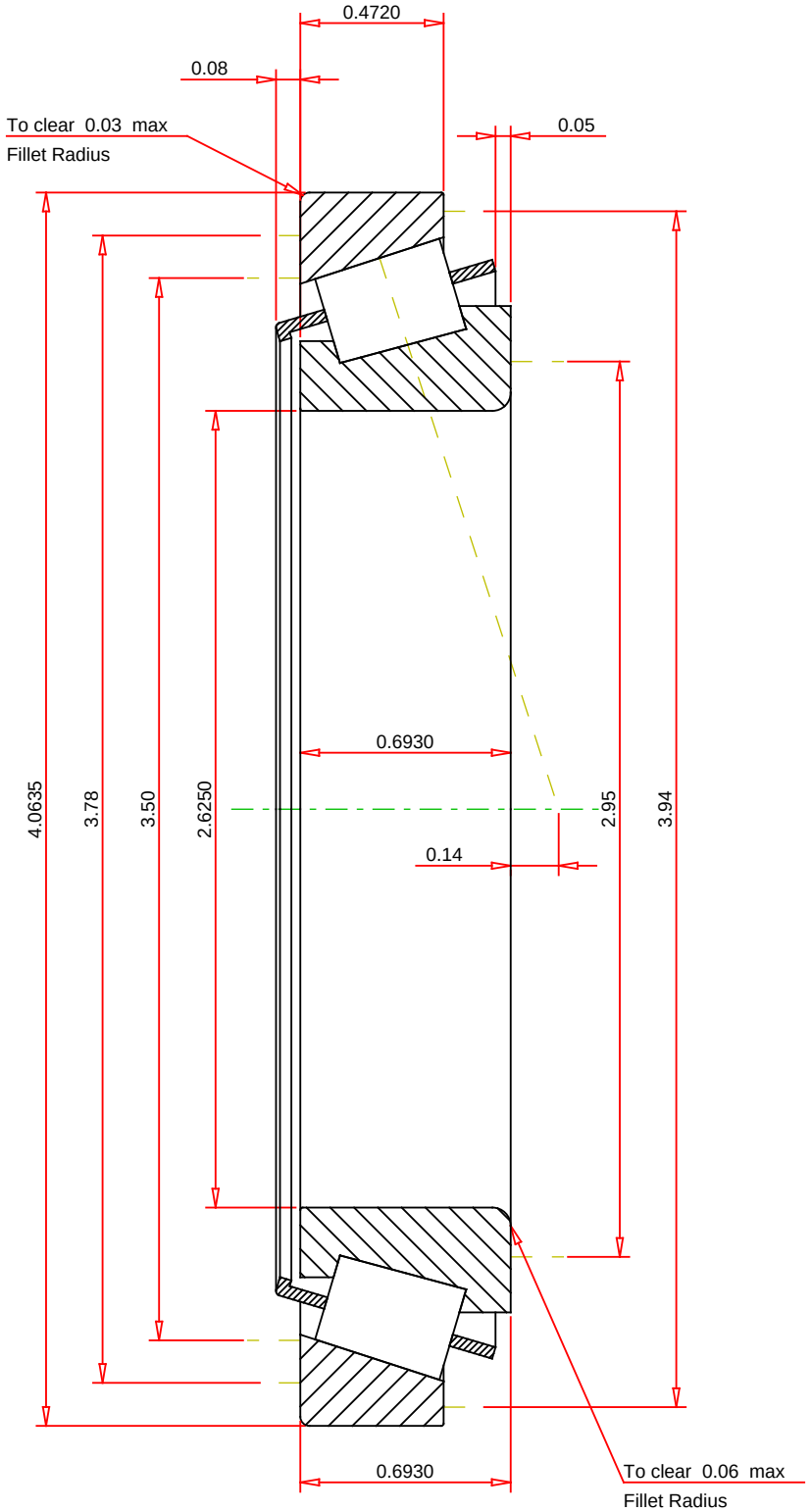

IMPERIAL UNITS

ISO Factor - e	0.49	
ISO Factor - Y	1.23	
Bearing Weight	1.1	lb
Number of Rollers Per Row	25	
Effective Center Location	0.14	inch

TIMKEN®

THE TIMKEN COMPANY
NORTH CANTON, OHIO USA

L812148 - L812111
TS BEARING ASSEMBLY

K Factor	1.2	
Dynamic Radial Rating - C90	21500	lbf
Dynamic Thrust Rating - Ca90	17900	lbf
Static Radial Rating - C0	89100	lbf
Dynamic Radial Rating - C1	82900	lbf

Every reasonable effort has been made to ensure the accuracy of the information contained in this writing, but no liability is accepted for errors, omissions or for any other reason.

FOR DISCUSSION ONLY