The Timken Company
4500 Mt Pleasant St. NW
N. Canton, OH 44720
Phone: (234) 262-3000
E-Mail: CustomerCAD@timken.com • **Web site:** www.timken.com

Timken Part Number JM736149 - JM736110, Tapered Roller Bearings - TS (Tapered Single) Metric

This is the most basic and most widely used type of tapered roller bearing. It consists of two main separable parts: the cone (inner ring) assembly and the cup (outer ring). It is typically mounted in opposing pairs on a shaft.



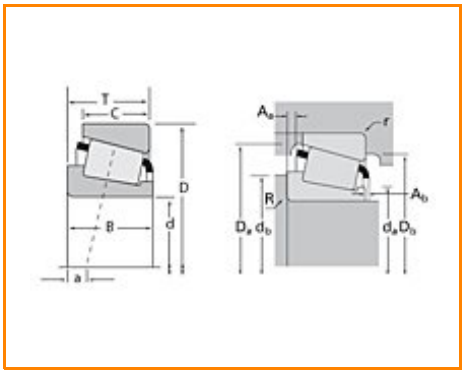

Specifications | Dimensions | Abutment and Fillet Dimensions | Basic Load Ratings | Factors

Specifications

Series	M736100
Cone Part Number	JM736149
Cup Part Number	JM736110
Design Units	METRIC
Bearing Weight	6.70 Kg 14.700 lb
Cage Type	Stamped Steel

Dimensions

d - Bore	180 mm 7.0866 in
D - Cup Outer Diameter	250 mm 9.8425 in
B - Cone Width	45 mm 1.7717 in
C - Cup Width	37.000 mm 1.4567 in
T - Bearing Width	47.000 mm 1.8504 in

Abutment and Fillet Dimensions

R - Cone Backface "To Clear" Radius[1]	3.050 mm 0.12 in
r - Cup Backface "To Clear" Radius[2]	2.54 mm 0.1 in
da - Cone Frontface Backing Diameter	190.50 mm 7.50 in
db - Cone Backface Backing Diameter	196.09 mm 7.72 in
Da - Cup Frontface Backing Diameter	243.08 mm 9.57 in
Db - Cup Backface Backing Diameter	231.90 mm 9.13 in
Ab - Cage-Cone Frontface Clearance	4.8 mm 0.19 in
Aa - Cage-Cone Backface Clearance	2.8 mm 0.11 in
a - Effective Center Location[3]	8.9 mm 0.35 in

Basic Load Ratings

C90 - Dynamic Radial Rating (90 million revolutions)[4]	106000 N 23800 lbf
C1 - Dynamic Radial Rating (1 million revolutions)[5]	409000 N 92000 lbf
C0 - Static Radial Rating	786000 N 177000 lbf
C_{a90} - Dynamic Thrust Rating (90 million revolutions)[6]	87200 N 19600 lbf

Factors

K - Factor[7]	1.22
e - ISO Factor[8]	0.48
Y - ISO Factor[9]	1.25
G1 - Heat Generation Factor (Roller-Raceway)	589
G2 - Heat Generation Factor (Rib-Roller End)	128
Cg - Geometry Factor	0.123

[1] These maximum fillet radii will be cleared by the bearing corners.

[2] These maximum fillet radii will be cleared by the bearing corners.

[3] Negative value indicates effective center inside cone backface.

[4] Based on 90 x 10^6 revolutions L_{10} life, for The Timken Company life calculation method. C_{90} and C_{a90} are radial and thrust values.

[5] Based on 1 x 10^6 revolutions L_{10} life, for the ISO life calculation method.

[6] Based on 90 x 10^6 revolutions L_{10} life, for The Timken Company life calculation method. C_{90} and C_{a90} are radial and thrust values for a single-row, $C_{90(2)}$ is the two-row radial value.

[7] These factors apply for both inch and metric calculations. Consult your Timken representative for instruction on use.

[8] These factors apply for both inch and metric calculations. Consult your Timken representative for instruction

on use.

[9] These factors apply for both inch and metric calculations. Consult your Timken representative for instruction on use.

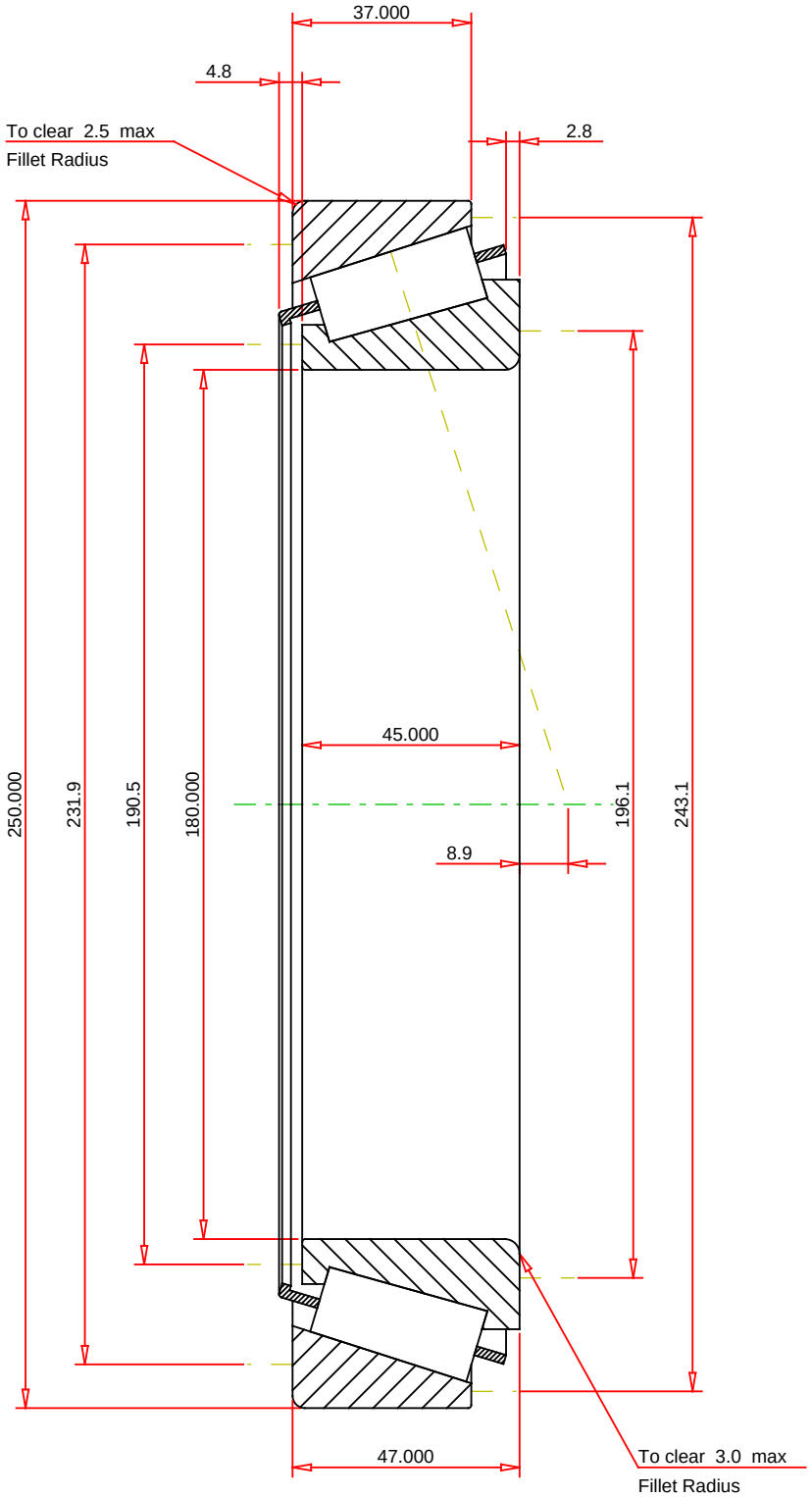

METRIC UNITS

ISO Factor - e	0.48	
ISO Factor - Y	1.25	
Bearing Weight	6.7	kg
Number of Rollers Per Row	32	
Effective Center Location	8.9	mm

TIMKEN®

THE TIMKEN COMPANY
NORTH CANTON, OHIO USA

JM736149 - JM736110
TS BEARING ASSEMBLY

K Factor	1.22	
Dynamic Radial Rating - C90	106000	N
Dynamic Thrust Rating - Ca90	87200	N
Static Radial Rating - C0	786000	N
Dynamic Radial Rating - C1	409000	N

Every reasonable effort has been made to ensure the accuracy of the information contained in this writing, but no liability is accepted for errors, omissions or for any other reason.

FOR DISCUSSION ONLY